SUPERIOR
CALORE DA VIVERE

PRICE LIST

SEPTEMBER 2020

PRICE LIST

SEPTEMBER 2020

INDEX

Superior product range 3

PELLET STOVES

CLEMY 10
CLEO 10
GIOIA 11
LIA 11
LISA 12
MAYA 12
MARCELLA 13
MILLY 13
MONIA 14
MONIA E 14
MONICA 15
RITA 15
SABRINA 16
SALLY 16
SAMANTA 17
SOLANGE 17
SONIA 18
SVEVA 18

PELLET INSERTS

SCP 7 27
SCP 9 28
SCP 11 29

PELLET STOVES - THERMO

TAMARA TH 35
TANYA TH 36
TERRY TH 37

PELLET-BURNING VENTILATED THERMO INSERTS

SCP 14 TH 42

PELLET BOILERS

CPS 20 48
CPS 26 49
CPS 26 ACS 50
CPS 32 51
CPS 32 ACS 52

WOOD-BURNING STOVES

MADDALENA WITH OVEN 71
MALIKA WITH OVEN 71
MANUELA 72
MARELLA 72
MEDEA 73
MICAELA 73
MILENA WITH OVEN 74
MILVA 74
MIRIAM 75
MORENA WITH OVEN 75
SANDRA 76
SARA WITH OVEN 76
SAVINA WITH OVEN 77
SIBILLA 77
SILVIA 78
SIMONA WITH OVEN 78
STEFANIA 79
VALERIA 79
VIOLA 80

Superior informs. 88

General sales terms and conditions 89

SUPERIOR PRODUCT RANGE

TYPE	NOMINAL HEAT OUTPUT	FORCED VENTILATION	DUCTABLE	HERMETIC
PELLET STOVES	6,0 kW	CLEMY CLEO		
	6,4 kW			MONIA E
	8,0 kW	LIA LISA	LIA LISA	
	8,2 kW	MAYA MARCELLA MILLY MONIA MONICA	MILLY	
	9,0 kW	GIOIA		
	10,2 kW	SALLY		
	11,1 kW	SABRINA SAMANTA SOLANGE SONIA SVEVA	SOLANGE SONIA	
	11,2 kW	RITA	RITA	

TYPE	NOMINAL HEAT OUTPUT	FORCED VENTILATION
PELLET INSERTS	7,0 kW	SCP 7
	9,0 kW	SCP 9
	11,0 kW	SCP 11

TYPE	NOMINAL WATER OUTPUT	THERMO - FORCED VENTILATION
PELLET BOILER STOVES	10,4 kW	TERRY TH
	12,1 kW	TANYA TH
	18,0 kW	TAMARA TH

TYPE	NOMINAL WATER OUTPUT	THERMO - FORCED VENTILATION
THERMO PELLET INSERTS	14,0 kW	SCP 14 TH

TYPE	NOMINAL WATER OUTPUT	THERMO
PELLET BOILERS	19,6 kW	CPS 20
	25,8 kW	CPS 26 - CPS 26 ACS
	32,0 kW	CPS 32 - CPS 32 ACS

TYPE	FIREBOX OUTPUT	WOOD-BURNING STOVES	WOOD-BURNING STOVES WITH OVEN
WOOD-BURNING STOVES	6,2 kW		MADDALENA MALIKA MILENA MORENA
	6,6 kW	MANUELA MARELLA MEDEA MICAELA MILVA MIRIAM	
	7,0 kW	VALERIA	
	8,0 kW	SANDRA SIBILLA SILVIA STEFANIA VIOLA	SARA SAVINA SIMONA

PELLET STOVES

Data charts 6

CLEMY 10
CLEO 10
GIOIA 11
LIA 11
LISA 12
MAYA 12
MARCELLA 13
MILLY 13
MONIA. 14
MONIA E. 14
MONICA 15
RITA 15
SABRINA 16
SALLY. 16
SAMANTA 17
SOLANGE 17
SONIA 18
SVEVA 18

Accessories 19

Technical drawings 22

Pellet-burning stoves

Data charts

Technical data	Units	CLEMY	CLEO	GIOIA
Forced ventilation		**yes**	**yes**	**yes**
Ductable		**-**	**-**	**-**
Natural convection		**-**	**-**	**-**
Hermetic		**-**	**-**	**-**
Model		CLEMY	CLEO	GIOIA
Type		SP50-02	SP50	SP130-S10
Energy efficiency class		A+	A+	A+
Dimensions W x D x H	cm	49 x 45 x 96	45,5 x 43 x 96	77 x 49 x 80
Nominal heat output (min - max)	kW	2,5 - 6,0	2,4 - 6,0	3,5 - 9,0
Thermal efficiency (min - max)	%	90,0 - 90,0	90,0 - 90,0	88,4 - 86,6
Nominal consumption (min - max)	kg/h	0,5 - 1,4	0,5 - 1,4	0,8 - 2,1
Standard flue outlet Ø	cm	8	8	8
Hopper capacity	kg	10,5	10,5	18
Stove weight	kg	85	90	150
Room heating capacity *	m³	100 - 175	100 - 175	150 - 260
Cladding		painted steel	painted steel	painted steel
Top		steel	cast iron with majolica insert	cast iron with majolica insert
Stove		steel	steel	steel
Firebox		cast iron	cast iron	cast iron
Baffle plate		cast iron	cast iron	cast iron
Brazier		cast iron	cast iron	cast iron
Door		cast iron	cast iron	cast iron
Aesthetic door		steel	-	-
Door handle		painted steel, detachable	painted steel, detachable	painted steel, detachable
Standard flue outlet position		rear	rear	rear - top
Optional flue outlet		RH side - LH side	RH side - LH side	-
Remote control		optional	optional	optional
Display with digital controls		yes	yes	yes
Power levels		4	4	4
Ambient probe for controlling the set temperature		standard	standard	standard
Programmable timer-thermostat		6 daily time frames	6 daily time frames	6 daily time frames
Warm air outlets		front upper	front upper	front upper
Humidifier		optional	optional	optional
Ceramic glass		resistant up to 750°C	resistant up to 750°C	resistant up to 750°C
Glass cleaning system		continuous air flow	continuous air flow	continuous air flow
Brazier cleaning intervals		yes	yes	yes
Pellet level indicator		yes	yes	yes
Hot air ducting kit		-	-	-
Optional ambient thermostat		-	-	-
Removable ash drawer		yes	yes	yes
Module WiFI- Bluetoothfor App MYSUPERIOR		optional	optional	optional
Module for SMS management		optional	optional	optional
Energy Saving		yes	yes	yes
Eco Function		yes	yes	yes
Night mode		yes	-	-
Installation **		wall - corner	wall - corner	wall - corner
Flush installation		-	-	-
Page		10	10	11

* Calculated on the basis of nominal heat output, referring to rooms with a heating requirement between 0.060 and 0.035 kW per m³. We recommend always contacting a heating engineer for the final calculations.

** Please refer to the instruction manual for details regarding the type of installation.

Prices are considered to be without sales taxes. "SUPERIOR" - Gruppo Piazzetta S.p.A. reserves the right to make any technical and aesthetic changes without prior notice.Document reserved for the Gruppo Piazzetta S.p.A. sales organisation.

Pellet-burning stoves

Data charts

LIA	LISA	MAYA	MARCELLA	MILLY	MONIA
yes	**yes**	**yes**	**yes**	**yes**	**yes**
yes	**yes**	**-**	**-**	**yes**	**-**
-	**-**	**-**	**-**	**-**	**-**
-	**-**	**-**	**-**	**-**	**-**
LIA	LISA	MAYA	MARCELLA	MILLY	MONIA
SP123-01	SP123-01	SP10/E-02	SP10/E-01	SP10/E-02	SP10/E-01
A+	A+	A+	A+	A+	A+
89 x 23 x 112	89 x 23 x 112	51 x 50 x 100	54 x 48 x 99	49,5 x 47 x 107	54 x 48 x 99
4,0 - 8,0	4,0 - 8,0	2,6 - 8,2	2,6 - 8,2	2,6 - 8,2	2,6 - 8,2
89,2 - 87,1	89,2 - 87,1	86,8 - 89,1	86,8 - 89,1	86,8 - 89,1	86,8 - 89,1
0,9 - 1,8	0,9 - 1,8	0,6 - 1,8	0,6 - 1,8	0,6 - 1,8	0,6 - 1,8
8	8	8	8	8	8
17	17	16	16	16	16
125	145	98	150	103	98
135 - 230	135 - 230	140 - 235	140 - 235	140 - 235	140 - 235
painted steel	majolica	painted steel	majolica	painted steel	painted steel
majolica	majolica	steel	cast iron with majolica insert	cast iron with majolica insert	cast iron with majolica insert
steel	steel	steel	steel	steel	steel
cast iron	cast iron	cast iron	cast iron	cast iron	cast iron
cast iron	cast iron	cast iron	cast iron	cast iron	cast iron
cast iron	cast iron	cast iron	cast iron	cast iron	cast iron
cast iron	cast iron	cast iron	cast iron	cast iron	cast iron
-	-	steel	-	-	-
painted steel, detachable	painted steel, detachable	painted steel, detachable	painted steel, detachable	painted steel, detachable	painted steel, detachable
RH rear - RH side - RH top	RH rear - RH side - RH top	rear	rear	rear	rear
LH rear - LH side - top central	LH rear - LH side - top central	LH side	-	RH side - LH side	LH side
optional	optional	optional	optional	optional	optional
yes	yes	yes	yes	yes	yes
4	4	4	4	4	4
standard	standard	standard	standard	standard	standard
6 daily time frames	6 daily time frames	6 daily time frames	6 daily time frames	6 daily time frames	6 daily time frames
front upper	front upper	front upper	front upper	front upper	front upper
optional	optional	optional	optional	optional	optional
resistant up to 750°C	resistant up to 750°C	resistant up to 750°C	resistant up to 750°C	resistant up to 750°C	resistant up to 750°C
continuous air flow	continuous air flow	continuous air flow	continuous air flow	continuous air flow	continuous air flow
yes	yes	yes	yes	yes	yes
yes	yes	yes	yes	yes	yes
optional	optional	-	-	optional	-
-	-	-	-	-	-
yes	yes	yes	yes	yes	yes
optional	optional	optional	optional	optional	optional
optional	optional	optional	optional	optional	optional
yes	yes	yes	yes	yes	yes
yes	yes	yes	yes	yes	yes
yes	yes	yes	-	yes	-
wall	wall	wall - corner	wall - corner	wall - corner	wall - corner
yes	yes	-	-	-	-
11	12	12	13	13	14

Prices are considered to be without sales taxes. "SUPERIOR" - Gruppo Piazzetta S.p.A. reserves the right to make any technical and aesthetic changes without prior notice.Document reserved for the Gruppo Piazzetta S.p.A. sales organisation.

Pellet-burning stoves

Data charts

Technical data	Units	MONIA E	MONICA	RITA
Forced ventilation		**yes**	**yes**	**yes**
Ductable		**-**	**-**	**yes**
Natural convection		**-**	**-**	**-**
Hermetic		**yes**	**-**	**-**
Model		MONIA-S	MONICA	RITA
Type		SP015-S00	SP10/E-02	SP351-02
Energy efficiency class		A+	A+	A+
Dimensions W x D x H	cm	54 x 49 x 99	54 x 51 x 108	95 x 31 x 125
Nominal heat output (min - max)	kW	2,5 - 6,4	2,6 - 8,2	4,1 - 11,2
Thermal efficiency (min - max)	%	90,4 - 91,1	86,8 - 89,1	90,0 - 90,3
Nominal consumption (min - max)	kg/h	0,5 - 1,4	0,6 - 1,8	0,9 - 2,5
Standard flue outlet Ø	cm	8	8	8
Hopper capacity	kg	16	18	27
Stove weight	kg	110	115	170
Room heating capacity *	m³	110 - 185	140 - 235	190 - 320
Cladding		painted steel	painted steel	painted steel
Top		cast iron with majolica insert	cast iron with majolica insert	majolica
Stove		airtight, steel	steel	steel
Firebox		cast iron	cast iron	cast iron
Baffle plate		cast iron	cast iron	cast iron
Brazier		cast iron	cast iron	cast iron
Door		cast iron	cast iron	cast iron
Aesthetic door		-	-	-
Door handle		painted steel, detachable	painted steel, detachable	painted steel, detachable
Standard flue outlet position		rear	rear	RH rear - RH side - RH top
Optional flue outlet		LH side	RH side - LH side	LH rear - LH side
Remote control		optional	optional	optional
Display with digital controls		yes	yes	yes
Power levels		4	4	5
Ambient probe for controlling the set temperature		standard	standard	standard
Programmable timer-thermostat		6 daily time frames	6 daily time frames	6 daily time frames
Warm air outlets		front upper	front upper	front upper
Humidifier		optional	optional	optional
Ceramic glass		resistant up to 750°C	resistant up to 750°C	resistant up to 750°C
Glass cleaning system		continuous air flow	continuous air flow	continuous air flow
Brazier cleaning intervals		yes	yes	yes
Pellet level indicator		yes	yes	yes
Hot air ducting kit		-	-	optional
Optional ambient thermostat		-	-	separate control of ventilation
Removable ash drawer		yes	yes	yes
Module WiFI- Bluetoothfor App MYSUPERIOR		optional	optional	optional
Module for SMS management		optional	optional	optional
Energy Saving		yes	yes	yes
Eco Function		yes	yes	yes
Night mode		-	yes	yes
Installation **		wall - corner	wall - corner	wall
Flush installation		-	-	yes
Page		14	15	15

* Calculated on the basis of nominal heat output, referring to rooms with a heating requirement between 0.060 and 0.035 kW per m³. We recommend always contacting a heating engineer for the final calculations.

** Please refer to the instruction manual for details regarding the type of installation.

Prices are considered to be without sales taxes. "SUPERIOR" - Gruppo Piazzetta S.p.A. reserves the right to make any technical and aesthetic changes without prior notice.Document reserved for the Gruppo Piazzetta S.p.A. sales organisation.

Pellet-burning stoves

Data charts

SABRINA	SALLY	SAMANTA	SOLANGE	SONIA	SVEVA
yes	**yes**	**yes**	**yes**	**yes**	**yes**
-	-	-	**yes**	**yes**	-
-	-	-	-	-	-
-	-	-	-	-	-
SABRINA	SALLY	SAMANTA	SOLANGE	SONIA	SVEVA
SP40/E-01	SP40/E-02	SP40/E-01	SP40/E-02	SP40/E-02	SP40/E-01
A+	A+	A+	A+	A+	A+
64 x 54 x 115	57 x 56 x 116	58 x 51 x 116	62 x 59 x 124,5	61 x 53 x 123	64 x 54 x 115
4,7 - 10,2	4,7 - 10,2	4,7 - 10,2	4,7 - 10,2	4,7 - 10,2	4,7 - 10,2
88,2 - 88,1	88,2 - 88,1	88,2 - 88,1	88,2 - 88,1	88,2 - 88,1	88,2 - 88,1
1,1 - 2,3	1,1 - 2,3	1,1 - 2,3	1,1 - 2,3	1,1 - 2,3	1,1 - 2,3
8	8	8	8	8	8
30	30	30	32	32	30
130	130	151	160	140	190
170 - 295	170 - 295	170 - 295	170 - 295	170 - 295	170 - 295
painted steel	painted steel	painted steel	painted steel	painted steel	majolica
cast iron with majolica insert	steel	majolica	cast iron with majolica insert	cast iron with majolica insert	cast iron with majolica insert
steel	steel	steel	steel	steel	steel
cast iron	cast iron	cast iron	cast iron	cast iron	cast iron
cast iron	cast iron	cast iron	cast iron	cast iron	cast iron
cast iron	cast iron	cast iron	cast iron	cast iron	cast iron
cast iron	cast iron	cast iron	cast iron	cast iron	cast iron
-	steel	-	-	-	-
painted steel, detachable	painted steel, detachable	painted steel, detachable	painted steel, detachable	painted steel, detachable	painted steel, detachable
rear	rear	rear	rear	rear	rear
LH side	LH side	LH side	RH side - LH side	RH side - LH side	-
optional	optional	optional	optional	optional	optional
yes	yes	yes	yes	yes	yes
5	5	5	5	5	5
standard	standard	standard	standard	standard	standard
6 daily time frames	6 daily time frames	6 daily time frames	6 daily time frames	6 daily time frames	6 daily time frames
front upper	front upper	front upper	front upper	front upper	front upper
optional	optional	optional	optional	optional	optional
resistant up to 750°C	resistant up to 750°C	resistant up to 750°C	resistant up to 750°C	resistant up to 750°C	resistant up to 750°C
continuous air flow	continuous air flow	continuous air flow	continuous air flow	continuous air flow	continuous air flow
yes	yes	yes	yes	yes	yes
yes	yes	yes	yes	yes	yes
-	-	-	optional	optional	-
-	-	-	separate control of ventilation	-	-
yes	yes	yes	yes	yes	yes
optional	optional	optional	optional	optional	optional
optional	optional	optional	optional	optional	optional
yes	yes	yes	yes	yes	yes
yes	yes	yes	yes	yes	yes
-	yes	-	yes	yes	-
wall - corner	wall - corner	wall - corner	wall - corner	wall - corner	wall - corner
-	-	-	-	-	-
16	16	17	17	18	18

Prices are considered to be without sales taxes. "SUPERIOR" - Gruppo Piazzetta S.p.A. reserves the right to make any technical and aesthetic changes without prior notice.Document reserved for the Gruppo Piazzetta S.p.A. sales organisation.

CLEMY

FORCED VENTILATION

NATURAL HEATING

Technical drawing on page 22.

Data chart on page 6.

	TOTAL PRICE
Total price including stove and painted steel cladding	2.205,00

	MODEL/COLOUR	CODE	EURO
Firebox with cladding	BIANCO	S07470010C	2.205,00
	BORDEAUX	S07470020C	2.205,00
	GRIGIO	S07470030C	2.205,00

ACCESSORIES ON REQUEST	CODE	EURO
Remote control	S08012960C	46,00
Right-hand or left-hand side flue kit	S08011130C	46,00
Humidifier	S08010910C	25,00
Wi-Fi module for control with Superior App	N08013013C	245,00
GPRS for remote stove operation by SMS text	N08013005C	402,00
Protection kit	S08012970C	60,00
Combustion air kit	N08010012C	83,00
Flexible pipe Ø 6 cm for combustion air	N08011017	15,00 per linear metre

If a remote control is installed, a GPRS module and Wi-Fi cannot be installed.

GENERAL CHARACTERISTICS

Heating	forced ventilation
Cladding	painted steel
Top	steel
Stove	steel
Firebox	cast iron
Baffle plate	cast iron
Brazier	cast iron
Door	cast iron
Aesthetic door	steel
Door handle	painted steel, detachable
Standard flue outlet position	rear
Optional flue outlet	RH side - LH side
Remote control	optional
Display with digital controls	yes
Power levels	4
Ambient probe for temperature control	standard
Programmable timer-thermostat	6 daily time frames
Warm air outlets	front upper
Humidifier	optional
Ceramic glass	resistant up to 750°C
Glass cleaning system	continuous air flow
Brazier cleaning intervals	yes
Pellet level indicator	yes
Removable ash drawer	yes
Module WiFi- Bluetoothfor App MYSUPERIOR	optional
Module for SMS management	optional
Energy Saving	yes
Eco Function	yes
Night mode	yes
Installation	wall - corner

TECHNICAL DATA

Model		CLEMY
Type		SP50-02
Energy efficiency class		A+
Room heating capacity	m³	100 - 175
Nominal heat output (min - max)	kW	2,5 - 6,0
Thermal efficiency (min - max)	%	90,0 - 90,0
Nominal consumption (min - max)	kg/h	0,5 - 1,4
Standard flue outlet Ø	cm	8
Hopper capacity	kg	10,5
Dimensions W x D x H	cm	49 x 45 x 96
Stove weight	kg	85

A+ ENERGY EFFIC. CLASS

CLEO

FORCED VENTILATION

Technical drawing on page 22.

Data chart on page 6.

	TOTAL PRICE
Total price including stove and painted steel cladding	2.120,00

	MODEL/COLOUR	CODE	EURO
Firebox with cladding	BIANCO	S07210010C	2.120,00
	BORDEAUX	S07210020C	2.120,00
	GRIGIO	S07210030C	2.120,00

ACCESSORIES ON REQUEST	CODE	EURO
Remote control	S08010900C	46,00
Right-hand or left-hand side flue kit	S08011130C	46,00
Humidifier	S08010910C	25,00
Wi-Fi module for control with Superior App	N08013013C	245,00
GPRS for remote stove operation by SMS text	N08013005C	402,00
Combustion air kit	N08010012C	83,00
Flexible pipe Ø 6 cm for combustion air	N08011017	15,00 per linear metre

If a remote control is installed, a GPRS module and Wi-Fi cannot be installed.

GENERAL CHARACTERISTICS

Heating	forced ventilation
Cladding	painted steel
Top	cast iron with majolica insert
Stove	steel
Firebox	cast iron
Baffle plate	cast iron
Brazier	cast iron
Door	cast iron
Door handle	painted steel, detachable
Standard flue outlet position	rear
Optional flue outlet	RH side - LH side
Remote control	optional
Display with digital controls	yes
Power levels	4
Ambient probe for temperature control	standard
Programmable timer-thermostat	6 daily time frames
Warm air outlets	front upper
Humidifier	optional
Ceramic glass	resistant up to 750°C
Glass cleaning system	continuous air flow
Brazier cleaning intervals	yes
Pellet level indicator	yes
Removable ash drawer	yes
Module WiFi- Bluetoothfor App MYSUPERIOR	optional
Module for SMS management	optional
Energy Saving	yes
Eco Function	yes
Installation	wall - corner

TECHNICAL DATA

Model		CLEO
Type		SP50
Energy efficiency class		A+
Room heating capacity	m³	100 - 175
Nominal heat output (min - max)	kW	2,4 - 6,0
Thermal efficiency (min - max)	%	90,0 - 90,0
Nominal consumption (min - max)	kg/h	0,5 - 1,4
Standard flue outlet Ø	cm	8
Hopper capacity	kg	10,5
Dimensions W x D x H	cm	45,5 x 43 x 96
Stove weight	kg	90

A+ ENERGY EFFIC. CLASS

Prices are considered to be without sales taxes. “SUPERIOR” - Gruppo Piazzetta S.p.A. reserves the right to make any technical and aesthetic changes without prior notice.Document reserved for the Gruppo Piazzetta S.p.A. sales organisation.

GIOIA

FORCED VENTILATION

Technical drawing on page 22.

Data chart on page 6.

	TOTAL PRICE
Total price including stove and painted steel cladding	3.265,00

	MODEL/COLOUR	CODE	EURO
Firebox with cladding	BIANCO	S07380010C	3.265,00
	BORDEAUX	S07380020C	3.265,00
	GRIGIO	S07380030C	3.265,00

ACCESSORIES ON REQUEST	CODE	EURO
Remote control	S08010900C	46,00
Humidifier	S08010910C	25,00
Wi-Fi module for control with Superior App	N08013013C	245,00
GPRS for remote stove operation by SMS text	N08013005C	402,00
Combustion air kit	N08010012C	83,00
Flexible pipe Ø 6 cm for combustion air	N08011017	15,00 per linear metre

If a remote control is installed, a GPRS module and Wi-Fi cannot be installed.

GENERAL CHARACTERISTICS

Heating	forced ventilation
Cladding	painted steel
Top	cast iron with majolica insert
Stove	steel
Firebox	cast iron
Baffle plate	cast iron
Brazier	cast iron
Door	cast iron
Door handle	painted steel, detachable
Standard flue outlet position	rear - top
Remote control	optional
Display with digital controls	yes
Power levels	4
Ambient probe for temperature control	standard
Programmable timer-thermostat	6 daily time frames
Warm air outlets	front upper
Humidifier	optional
Ceramic glass	resistant up to 750°C
Glass cleaning system	continuous air flow
Brazier cleaning intervals	yes
Pellet level indicator	yes
Removable ash drawer	yes
Module WiFI- Bluetoothfor App MYSUPERIOR	optional
Module for SMS management	optional
Energy Saving	yes
Eco Function	yes
Installation	wall - corner

TECHNICAL DATA

Model		GIOIA
Type		SP130-S10
Energy efficiency class		A+
Room heating capacity	m³	150 - 260
Nominal heat output (min - max)	kW	3,5 - 9,0
Thermal efficiency (min - max)	%	88,4 - 86,6
Nominal consumption (min - max)	kg/h	0,8 - 2,1
Standard flue outlet Ø	cm	8
Hopper capacity	kg	18
Dimensions W x D x H	cm	77 x 49 x 80
Stove weight	kg	150

A+ ENERGY EFFIC. CLASS

LIA

FORCED VENTILATION

DUCTABLE

NATURAL HEATING

Technical drawing on page 22.

Data chart on page 7.

	TOTAL PRICE
Total price including stove and painted steel cladding	3.155,00

	MODEL/COLOUR	CODE	EURO
Firebox with cladding	BIANCO	S07330010C	3.155,00
	BORDEAUX	S07330020C	3.155,00
	GRIGIO	S07330030C	3.155,00

ACCESSORIES ON REQUEST	CODE	EURO
Hot air ducting kit [1]	S08012600C	210,00
Remote control	S08010900C	46,00
Rear / left-hand side flue kit	S08011650C	51,00
Top central flue kit	N08011015C	195,00
Humidifier	S08010910C	25,00
Wi-Fi module for control with Superior App	N08013013C	245,00
GPRS for remote stove operation by SMS text	N08013005C	402,00
Combustion air kit	N08010012C	83,00
Flexible pipe Ø 6 cm for combustion air	N08011017	15,00 per linear metre

[1] If the ducting kit is installed, the Night Mode cannot be activated.

If a remote control is installed, a GPRS module and Wi-Fi cannot be installed.

GENERAL CHARACTERISTICS

Heating	ductable forced ventilation
Cladding	painted steel
Top	majolica
Stove	steel
Firebox	cast iron
Baffle plate	cast iron
Brazier	cast iron
Door	cast iron
Door handle	painted steel, detachable
Standard flue outlet position	RH rear - RH side - RH top
Optional flue outlet	LH rear - LH side - top central
Remote control	optional
Display with digital controls	yes
Power levels	4
Ambient probe for temperature control	standard
Programmable timer-thermostat	6 daily time frames
Warm air outlets	front upper
Humidifier	optional
Ceramic glass	resistant up to 750°C
Glass cleaning system	continuous air flow
Brazier cleaning intervals	yes
Pellet level indicator	yes
Hot air ducting kit	optional
Removable ash drawer	yes
Module WiFI- Bluetoothfor App MYSUPERIOR	optional
Module for SMS management	optional
Energy Saving	yes
Eco Function	yes
Night mode	yes
Installation	wall
Flush installation	yes

TECHNICAL DATA

Model		LIA
Type		SP123-01
Energy efficiency class		A+
Room heating capacity	m³	135 - 230
Nominal heat output (min - max)	kW	4,0 - 8,0
Thermal efficiency (min - max)	%	89,2 - 87,1
Nominal consumption (min - max)	kg/h	0,9 - 1,8
Standard flue outlet Ø	cm	8
Hopper capacity	kg	17
Dimensions W x D x H	cm	89 x 23 x 112
Stove weight	kg	125

A+ ENERGY EFFIC. CLASS

Prices are considered to be without sales taxes. "SUPERIOR" - Gruppo Piazzetta S.p.A. reserves the right to make any technical and aesthetic changes without prior notice.Document reserved for the Gruppo Piazzetta S.p.A. sales organisation.

LISA

FORCED VENTILATION

DUCTABLE

NATURAL HEATING

Technical drawing on page 22.

Data chart on page 7.

	TOTAL PRICE
Total price including stove and majolica cladding	3.715,00

	MODEL/COLOUR	CODE	EURO
Cladding	BLU ANTICO	S06080870C	910,00
	BORDEAUX	S06080420C	910,00
	SALE PEPE	S06080070C	910,00
	TERRA ORIENTE	S06080550C	910,00
Firebox	LISA	S07340000C	2.805,00

ACCESSORIES ON REQUEST	CODE	EURO
Hot air ducting kit [1]	S08012600C	210,00
Remote control	S08010900C	46,00
Rear / left-hand side flue kit	S08011650C	51,00
Top central flue kit	N08011015C	195,00
Humidifier	S08010910C	25,00
Wi-Fi module for control with Superior App	N08013013C	245,00
GPRS for remote stove operation by SMS text	N08013005C	402,00
Combustion air kit	N08010012C	83,00
Flexible pipe Ø 6 cm for combustion air	N08011017	15,00 per linear metre

[1] If the ducting kit is installed, the Night Mode cannot be activated.
If a remote control is installed, a GPRS module and Wi-Fi cannot be installed.

GENERAL CHARACTERISTICS

Heating	ductable forced ventilation
Cladding	majolica
Top	majolica
Stove	steel
Firebox	cast iron
Baffle plate	cast iron
Brazier	cast iron
Door	cast iron
Door handle	painted steel, detachable
Standard flue outlet position	RH rear - RH side - RH top
Optional flue outlet	LH rear - LH side - top central
Remote control	optional
Display with digital controls	yes
Power levels	4
Ambient probe for temperature control	standard
Programmable timer-thermostat	6 daily time frames
Warm air outlets	front upper
Humidifier	optional
Ceramic glass	resistant up to 750°C
Glass cleaning system	continuous air flow
Brazier cleaning intervals	yes
Pellet level indicator	yes
Hot air ducting kit	optional
Removable ash drawer	yes
Module WiFI- Bluetoothfor App MYSUPERIOR	optional
Module for SMS management	optional
Energy Saving	yes
Eco Function	yes
Night mode	yes
Installation	wall
Flush installation	yes

TECHNICAL DATA

Model		LISA
Type		SP123-01
Energy efficiency class		A+
Room heating capacity	m³	135 - 230
Nominal heat output (min - max)	kW	4,0 - 8,0
Thermal efficiency (min - max)	%	89,2 - 87,1
Nominal consumption (min - max)	kg/h	0,9 - 1,8
Standard flue outlet Ø	cm	8
Hopper capacity	kg	17
Dimensions W x D x H	cm	89 x 23 x 112
Stove weight	kg	145

A+ ENERGY EFFIC. CLASS

MAYA

FORCED VENTILATION

NATURAL HEATING

Technical drawing on page 22.

Data chart on page 7.

	TOTAL PRICE
Total price including stove and painted steel cladding	2.565,00

	MODEL/COLOUR	CODE	EURO
Firebox with cladding	BIANCO	S07480010C	2.565,00
	BORDEAUX	S07480020C	2.565,00
	GRIGIO	S07480030C	2.565,00

ACCESSORIES ON REQUEST	CODE	EURO
Remote control	S08012960C	46,00
Side left-hand flue kit	S08012590C	67,00
Humidifier	S08010910C	25,00
Wi-Fi module for control with Superior App	N08013013C	245,00
GPRS for remote stove operation by SMS text	N08013005C	402,00
Protection kit	S08012970C	60,00
Combustion air kit	N08010012C	83,00
Flexible pipe Ø 6 cm for combustion air	N08011017	15,00 per linear metre

If a remote control is installed, a GPRS module and Wi-Fi cannot be installed.

GENERAL CHARACTERISTICS

Heating	forced ventilation
Cladding	painted steel
Top	steel
Stove	steel
Firebox	cast iron
Baffle plate	cast iron
Brazier	cast iron
Door	cast iron
Aesthetic door	steel
Door handle	painted steel, detachable
Standard flue outlet position	rear
Optional flue outlet	LH side
Remote control	optional
Display with digital controls	yes
Power levels	4
Ambient probe for temperature control	standard
Programmable timer-thermostat	6 daily time frames
Warm air outlets	front upper
Humidifier	optional
Ceramic glass	resistant up to 750°C
Glass cleaning system	continuous air flow
Brazier cleaning intervals	yes
Pellet level indicator	yes
Removable ash drawer	yes
Module WiFI- Bluetoothfor App MYSUPERIOR	optional
Module for SMS management	optional
Energy Saving	yes
Eco Function	yes
Night mode	yes
Installation	wall - corner

TECHNICAL DATA

Model		MAYA
Type		SP10/E-02
Energy efficiency class		A+
Room heating capacity	m³	140 - 235
Nominal heat output (min - max)	kW	2,6 - 8,2
Thermal efficiency (min - max)	%	86,8 - 89,1
Nominal consumption (min - max)	kg/h	0,6 - 1,8
Standard flue outlet Ø	cm	8
Hopper capacity	kg	16
Dimensions W x D x H	cm	51 x 50 x 100
Stove weight	kg	98

A+ ENERGY EFFIC. CLASS

Prices are considered to be without sales taxes. "SUPERIOR" - Gruppo Piazzetta S.p.A. reserves the right to make any technical and aesthetic changes without prior notice.Document reserved for the Gruppo Piazzetta S.p.A. sales organisation.

MARCELLA

FORCED VENTILATION

Technical drawing on page 23.

Data chart on page 7.

		TOTAL PRICE
Total price including stove and majolica cladding		3.035,00

	MODEL/COLOUR	CODE	EURO
Cladding	BLU ANTICO	S06070870C	735,00
	BORDEAUX	S06070420C	735,00
	SALE PEPE	S06070070C	735,00
	TERRA ORIENTE	S06070550C	735,00
Firebox	MARCELLA	S07220000C	2.300,00

ACCESSORIES ON REQUEST	CODE	EURO
Remote control	S08011020C	45,00
Humidifier	S08010910C	25,00
Wi-Fi module for control with Superior App	N08013013C	245,00
GPRS for remote stove operation by SMS text	N08013005C	402,00
Combustion air kit	N08010012C	83,00
Flexible pipe Ø 6 cm for combustion air	N08011017	15,00 per linear metre

If a remote control is installed, a GPRS module and Wi-Fi cannot be installed.

GENERAL CHARACTERISTICS

Heating	forced ventilation
Cladding	majolica
Top	cast iron with majolica insert
Stove	steel
Firebox	cast iron
Baffle plate	cast iron
Brazier	cast iron
Door	cast iron
Door handle	painted steel, detachable
Standard flue outlet position	rear
Remote control	optional
Display with digital controls	yes
Power levels	4
Ambient probe for temperature control	standard
Programmable timer-thermostat	6 daily time frames
Warm air outlets	front upper
Humidifier	optional
Ceramic glass	resistant up to 750°C
Glass cleaning system	continuous air flow
Brazier cleaning intervals	yes
Pellet level indicator	yes
Removable ash drawer	yes
Module WiFI- Bluetoothfor App MYSUPERIOR	optional
Module for SMS management	optional
Energy Saving	yes
Eco Function	yes
Installation	wall - corner

TECHNICAL DATA

Model		MARCELLA
Type		SP10/E-01
Energy efficiency class		A+
Room heating capacity	m³	140 - 235
Nominal heat output (min - max)	kW	2,6 - 8,2
Thermal efficiency (min - max)	%	86,8 - 89,1
Nominal consumption (min - max)	kg/h	0,6 - 1,8
Standard flue outlet Ø	cm	8
Hopper capacity	kg	16
Dimensions W x D x H	cm	54 x 48 x 99
Stove weight	kg	150

A+ ENERGY EFFIC. CLASS

MILLY

FORCED VENTILATION

DUCTABLE

NATURAL HEATING

Technical drawing on page 23.

Data chart on page 7.

		TOTAL PRICE
Total price including stove and painted steel cladding		2.620,00

	MODEL/COLOUR	CODE	EURO
Firebox with cladding	BIANCO	S07360010C	2.620,00
	BORDEAUX	S07360020C	2.620,00
	GRIGIO	S07360030C	2.620,00

ACCESSORIES ON REQUEST	CODE	EURO
Hot air ducting kit [1]	S08012600C	210,00
Remote control	S08010900C	46,00
Right-hand or left-hand side flue kit	S08012840C	67,00
Humidifier	S08010910C	25,00
Wi-Fi module for control with Superior App	N08013013C	245,00
GPRS for remote stove operation by SMS text	N08013005C	402,00
Combustion air kit	N08010012C	83,00
Flexible pipe Ø 6 cm for combustion air	N08011017	15,00 per linear metre

[1] If the ducting kit is installed, the Night Mode cannot be activated.
If a remote control is installed, a GPRS module and Wi-Fi cannot be installed.

GENERAL CHARACTERISTICS

Heating	ductable forced ventilation
Cladding	painted steel
Top	cast iron with majolica insert
Stove	steel
Firebox	cast iron
Baffle plate	cast iron
Brazier	cast iron
Door	cast iron
Door handle	painted steel, detachable
Standard flue outlet position	rear
Optional flue outlet	RH side - LH side
Remote control	optional
Display with digital controls	yes
Power levels	4
Ambient probe for temperature control	standard
Programmable timer-thermostat	6 daily time frames
Warm air outlets	front upper
Humidifier	optional
Ceramic glass	resistant up to 750°C
Glass cleaning system	continuous air flow
Brazier cleaning intervals	yes
Pellet level indicator	yes
Hot air ducting kit	optional
Removable ash drawer	yes
Module WiFI- Bluetoothfor App MYSUPERIOR	optional
Module for SMS management	optional
Energy Saving	yes
Eco Function	yes
Night mode	yes
Installation	wall - corner

TECHNICAL DATA

Model		MILLY
Type		SP10/E-02
Energy efficiency class		A+
Room heating capacity	m³	140 - 235
Nominal heat output (min - max)	kW	2,6 - 8,2
Thermal efficiency (min - max)	%	86,8 - 89,1
Nominal consumption (min - max)	kg/h	0,6 - 1,8
Standard flue outlet Ø	cm	8
Hopper capacity	kg	16
Dimensions W x D x H	cm	49,5 x 47 x 107
Stove weight	kg	103

A+ ENERGY EFFIC. CLASS

Prices are considered to be without sales taxes. "SUPERIOR" - Gruppo Piazzetta S.p.A. reserves the right to make any technical and aesthetic changes without prior notice.Document reserved for the Gruppo Piazzetta S.p.A. sales organisation.

MONIA

FORCED VENTILATION

Technical drawing on page 23.

Data chart on page 7.

	TOTAL PRICE
Total price including stove and painted steel cladding	2.455,00

	MODEL/COLOUR	CODE	EURO
Firebox with cladding	BIANCO	S07190010C	2.455,00
	BORDEAUX	S07190020C	2.455,00
	GRIGIO	S07190030C	2.455,00

ACCESSORIES ON REQUEST	CODE	EURO
Remote control	S08010900C	46,00
Side left-hand flue kit	S08012590C	67,00
Humidifier	S08010910C	25,00
Wi-Fi module for control with Superior App	N08013013C	245,00
GPRS for remote stove operation by SMS text	N08013005C	402,00
Combustion air kit	N08010012C	83,00
Flexible pipe Ø 6 cm for combustion air	N08011017	15,00 per linear metre

If a remote control is installed, a GPRS module and Wi-Fi cannot be installed.

GENERAL CHARACTERISTICS

Heating	forced ventilation
Cladding	painted steel
Top	cast iron with majolica insert
Stove	steel
Firebox	cast iron
Baffle plate	cast iron
Brazier	cast iron
Door	cast iron
Door handle	painted steel, detachable
Standard flue outlet position	rear
Optional flue outlet	LH side
Remote control	optional
Display with digital controls	yes
Power levels	4
Ambient probe for temperature control	standard
Programmable timer-thermostat	6 daily time frames
Warm air outlets	front upper
Humidifier	optional
Ceramic glass	resistant up to 750°C
Glass cleaning system	continuous air flow
Brazier cleaning intervals	yes
Pellet level indicator	yes
Removable ash drawer	yes
Module WiFi- Bluetoothfor App MYSUPERIOR	optional
Module for SMS management	optional
Energy Saving	yes
Eco Function	yes
Installation	wall - corner

TECHNICAL DATA

Model		MONIA
Type		SP10/E-01
Energy efficiency class		A+
Room heating capacity	m³	140 - 235
Nominal heat output (min - max)	kW	2,6 - 8,2
Thermal efficiency (min - max)	%	86,8 - 89,1
Nominal consumption (min - max)	kg/h	0,6 - 1,8
Standard flue outlet Ø	cm	8
Hopper capacity	kg	16
Dimensions W x D x H	cm	54 x 48 x 99
Stove weight	kg	98

A+ ENERGY EFFIC. CLASS

MONIA E

FORCED VENTILATION

HERMETIC

Technical drawing on page 23.

Data chart on page 8.

	TOTAL PRICE
Total price including stove and painted steel cladding	2.845,00

	MODEL/COLOUR	CODE	EURO
Firebox with cladding	BIANCO	S07190110C	2.845,00
	BORDEAUX	S07190120C	2.845,00
	GRIGIO	S07190130C	2.845,00

ACCESSORIES ON REQUEST	CODE	EURO
Remote control	S08010900C	46,00
Side left-hand flue kit	S08010920C	45,00
Humidifier	S08010910C	25,00
Wi-Fi module for control with Superior App	N08013013C	245,00
GPRS for remote stove operation by SMS text	N08013005C	402,00
Flexible pipe Ø 6 cm for combustion air	N08011017	15,00 per linear metre

If a remote control is installed, a GPRS module and Wi-Fi cannot be installed.

GENERAL CHARACTERISTICS

Heating	forced ventilation
Cladding	painted steel
Top	cast iron with majolica insert
Stove	airtight, steel
Firebox	cast iron
Baffle plate	cast iron
Brazier	cast iron
Door	cast iron
Door handle	painted steel, detachable
Standard flue outlet position	rear
Optional flue outlet	LH side
Remote control	optional
Display with digital controls	yes
Power levels	4
Ambient probe for temperature control	standard
Programmable timer-thermostat	6 daily time frames
Warm air outlets	front upper
Humidifier	optional
Ceramic glass	resistant up to 750°C
Glass cleaning system	continuous air flow
Brazier cleaning intervals	yes
Pellet level indicator	yes
Removable ash drawer	yes
Module WiFi- Bluetoothfor App MYSUPERIOR	optional
Module for SMS management	optional
Energy Saving	yes
Eco Function	yes
Installation	wall - corner

TECHNICAL DATA

Model		MONIA-S
Type		SP015-S00
Energy efficiency class		A+
Room heating capacity	m³	110 - 185
Nominal heat output (min - max)	kW	2,5 - 6,4
Thermal efficiency (min - max)	%	90,4 - 91,1
Nominal consumption (min - max)	kg/h	0,5 - 1,4
Standard flue outlet Ø	cm	8
Hopper capacity	kg	16
Dimensions W x D x H	cm	54 x 49 x 99
Stove weight	kg	110

A+ ENERGY EFFIC. CLASS

Prices are considered to be without sales taxes. “SUPERIOR” - Gruppo Piazzetta S.p.A. reserves the right to make any technical and aesthetic changes without prior notice.Document reserved for the Gruppo Piazzetta S.p.A. sales organisation.

MONICA

FORCED VENTILATION

NATURAL HEATING

Technical drawing on page 23.

Data chart on page 8.

	TOTAL PRICE
Total price including stove and painted steel cladding	2.900,00

	MODEL/COLOUR	CODE	EURO
Firebox with cladding	BIANCO	S07420110C	2.900,00
	BORDEAUX	S07420120C	2.900,00
	BRUNITO (DISCONTINUED)	S07420140C	2.900,00
	GRIGIO	S07420130C	2.900,00

ACCESSORIES ON REQUEST	CODE	EURO
Remote control	S08010900C	46,00
Right-hand or left-hand side flue kit	S08012590C	67,00
Humidifier	S08010910C	25,00
Wi-Fi module for control with Superior App	N08013013C	245,00
GPRS for remote stove operation by SMS text	N08013005C	402,00
Combustion air kit	N08010012C	83,00
Flexible pipe Ø 6 cm for combustion air	N08011017	15,00 per linear metre

If a remote control is installed, a GPRS module and Wi-Fi cannot be installed.

GENERAL CHARACTERISTICS

Heating	forced ventilation
Cladding	painted steel
Top	cast iron with majolica insert
Stove	steel
Firebox	cast iron
Baffle plate	cast iron
Brazier	cast iron
Door	cast iron
Door handle	painted steel, detachable
Standard flue outlet position	rear
Optional flue outlet	RH side - LH side
Remote control	optional
Display with digital controls	yes
Power levels	4
Ambient probe for temperature control	standard
Programmable timer-thermostat	6 daily time frames
Warm air outlets	front upper
Humidifier	optional
Ceramic glass	resistant up to 750°C
Glass cleaning system	continuous air flow
Brazier cleaning intervals	yes
Pellet level indicator	yes
Removable ash drawer	yes
Module WiFi- Bluetoothfor App MYSUPERIOR	optional
Module for SMS management	optional
Energy Saving	yes
Eco Function	yes
Night mode	yes
Installation	wall - corner

TECHNICAL DATA

Model		MONICA
Type		SP10/E-02
Energy efficiency class		A+
Room heating capacity	m³	140 - 235
Nominal heat output (min - max)	kW	2,6 - 8,2
Thermal efficiency (min - max)	%	86,8 - 89,1
Nominal consumption (min - max)	kg/h	0,6 - 1,8
Standard flue outlet Ø	cm	8
Hopper capacity	kg	18
Dimensions W x D x H	cm	54 x 51 x 108
Stove weight	kg	115

A+ ENERGY EFFIC. CLASS

RITA

FORCED VENTILATION

DUCTABLE

NATURAL HEATING

Technical drawing on page 23.

Data chart on page 8.

	TOTAL PRICE
Total price including stove and painted steel cladding	3.950,00

	MODEL/COLOUR	CODE	EURO
Firebox with cladding	BIANCO	S07440110C	3.950,00
	BORDEAUX	S07440120C	3.950,00
	GRIGIO	S07440130C	3.950,00

ACCESSORIES ON REQUEST	CODE	EURO
Hot air ducting kit	S08012760C	210,00
Remote control	S08010900C	46,00
Rear / left-hand side flue kit	S08011650C	51,00
Humidifier	S08010910C	25,00
Wi-Fi module for control with Superior App for RITA	N08013023C	285,00
GPRS for remote stove operation by SMS text for RITA	NI08013005-0	437,00
Combustion air kit	N08010009C	46,00
Flexible pipe Ø 6 cm for combustion air	N08011017	15,00 per linear metre

If a remote control is installed, a GPRS module and Wi-Fi cannot be installed.

GENERAL CHARACTERISTICS

Heating	ductable forced ventilation
Cladding	painted steel
Top	majolica
Stove	steel
Firebox	cast iron
Baffle plate	cast iron
Brazier	cast iron
Door	cast iron
Door handle	painted steel, detachable
Standard flue outlet position	RH rear - RH side - RH top
Optional flue outlet	LH rear - LH side
Remote control	optional
Display with digital controls	yes
Power levels	5
Ambient probe for temperature control	standard
Programmable timer-thermostat	6 daily time frames
Warm air outlets	front upper
Humidifier	optional
Ceramic glass	resistant up to 750°C
Glass cleaning system	continuous air flow
Brazier cleaning intervals	yes
Pellet level indicator	yes
Hot air ducting kit	optional
Optional ambient thermostat	separate control of ventilation
Removable ash drawer	yes
Module WiFi- Bluetoothfor App MYSUPERIOR	optional
Module for SMS management	optional
Energy Saving	yes
Eco Function	yes
Night mode	yes
Installation	wall
Flush installation	yes

TECHNICAL DATA

Model		RITA
Type		SP351-02
Energy efficiency class		A+
Room heating capacity	m³	190 - 320
Nominal heat output (min - max)	kW	4,1 - 11,2
Thermal efficiency (min - max)	%	90,0 - 90,3
Nominal consumption (min - max)	kg/h	0,9 - 2,5
Standard flue outlet Ø	cm	8
Hopper capacity	kg	27
Dimensions W x D x H	cm	95 x 31 x 125
Stove weight	kg	170

A+ ENERGY EFFIC. CLASS

Prices are considered to be without sales taxes. "SUPERIOR" - Gruppo Piazzetta S.p.A. reserves the right to make any technical and aesthetic changes without prior notice.Document reserved for the Gruppo Piazzetta S.p.A. sales organisation.

SABRINA

FORCED VENTILATION

Technical drawing on page 24.

Data chart on page 9.

	MODEL/COLOUR	CODE	TOTAL PRICE EURO
Total price including stove and painted steel cladding			3.025,00
Firebox with cladding	BIANCO	S07200010C	3.025,00
	BORDEAUX	S07200020C	3.025,00
	GRIGIO	S07200030C	3.025,00

ACCESSORIES ON REQUEST	CODE	EURO
Remote control	S08010900C	46,00
Side left-hand flue kit	S08012590C	67,00
Humidifier	S08010910C	25,00
Wi-Fi module for control with Superior App	N08013013C	245,00
GPRS for remote stove operation by SMS text	N08013005C	402,00
Combustion air kit	N08019032C	46,00
Flexible pipe Ø 6 cm for combustion air	N08011017	15,00 per linear metre

If a remote control is installed, a GPRS module and Wi-Fi cannot be installed.

GENERAL CHARACTERISTICS

Heating	forced ventilation
Cladding	painted steel
Top	cast iron with majolica insert
Stove	steel
Firebox	cast iron
Baffle plate	cast iron
Brazier	cast iron
Door	cast iron
Door handle	painted steel, detachable
Standard flue outlet position	rear
Optional flue outlet	LH side
Remote control	optional
Display with digital controls	yes
Power levels	5
Ambient probe for temperature control	standard
Programmable timer-thermostat	6 daily time frames
Warm air outlets	front upper
Humidifier	optional
Ceramic glass	resistant up to 750°C
Glass cleaning system	continuous air flow
Brazier cleaning intervals	yes
Pellet level indicator	yes
Removable ash drawer	yes
Module WiFI- Bluetoothfor App MYSUPERIOR	optional
Module for SMS management	optional
Energy Saving	yes
Eco Function	yes
Installation	wall - corner

TECHNICAL DATA

Model		SABRINA
Type		SP40/E-01
Energy efficiency class		A+
Room heating capacity	m³	170 - 295
Nominal heat output (min - max)	kW	4,7 - 10,2
Thermal efficiency (min - max)	%	88,2 - 88,1
Nominal consumption (min - max)	kg/h	1,1 - 2,3
Standard flue outlet Ø	cm	8
Hopper capacity	kg	30
Dimensions W x D x H	cm	64 x 54 x 115
Stove weight	kg	130

A+ ENERGY EFFIC. CLASS

SALLY

FORCED VENTILATION

NATURAL HEATING

Technical drawing on page 24.

Data chart on page 9.

	MODEL/COLOUR	CODE	TOTAL PRICE EURO
Total price including stove and painted steel cladding			3.065,00
Firebox with cladding	BIANCO	S07500010C	3.065,00
	BORDEAUX	S07500020C	3.065,00
	GRIGIO	S07500030C	3.065,00

ACCESSORIES ON REQUEST	CODE	EURO
Remote control	S08012960C	46,00
Side left-hand flue kit	S08012590C	67,00
Humidifier	S08010910C	25,00
Wi-Fi module for control with Superior App	N08013013C	245,00
GPRS for remote stove operation by SMS text	N08013005C	402,00
Protection kit	S08012980C	70,00
Combustion air kit	N08019032C	46,00
Flexible pipe Ø 6 cm for combustion air	N08011017	15,00 per linear metre

If a remote control is installed, a GPRS module and Wi-Fi cannot be installed.

GENERAL CHARACTERISTICS

Heating	forced ventilation
Cladding	painted steel
Top	steel
Stove	steel
Firebox	cast iron
Baffle plate	cast iron
Brazier	cast iron
Door	cast iron
Aesthetic door	steel
Door handle	painted steel, detachable
Standard flue outlet position	rear
Optional flue outlet	LH side
Remote control	optional
Display with digital controls	yes
Power levels	5
Ambient probe for temperature control	standard
Programmable timer-thermostat	6 daily time frames
Warm air outlets	front upper
Humidifier	optional
Ceramic glass	resistant up to 750°C
Glass cleaning system	continuous air flow
Brazier cleaning intervals	yes
Pellet level indicator	yes
Removable ash drawer	yes
Module WiFI- Bluetoothfor App MYSUPERIOR	optional
Module for SMS management	optional
Energy Saving	yes
Eco Function	yes
Night mode	yes
Installation	wall - corner

TECHNICAL DATA

Model		SALLY
Type		SP40/E-02
Energy efficiency class		A+
Room heating capacity	m³	170 - 295
Nominal heat output (min - max)	kW	4,7 - 10,2
Thermal efficiency (min - max)	%	88,2 - 88,1
Nominal consumption (min - max)	kg/h	1,1 - 2,3
Standard flue outlet Ø	cm	8
Hopper capacity	kg	30
Dimensions W x D x H	cm	57 x 56 x 116
Stove weight	kg	130

A+ ENERGY EFFIC. CLASS

Prices are considered to be without sales taxes. "SUPERIOR" - Gruppo Piazzetta S.p.A. reserves the right to make any technical and aesthetic changes without prior notice.Document reserved for the Gruppo Piazzetta S.p.A. sales organisation.

SAMANTA

FORCED VENTILATION

Technical drawing on page 24.

Data chart on page 9.

	TOTAL PRICE
Total price including stove and painted steel cladding	3.155,00

	MODEL/COLOUR	CODE	EURO
Firebox with cladding	BIANCO	S07250010C	3.155,00
	BORDEAUX	S07250020C	3.155,00
	GRIGIO	S07250030C	3.155,00

ACCESSORIES ON REQUEST	CODE	EURO
Remote control	S08010900C	46,00
Side left-hand flue kit	S08012590C	67,00
Humidifier	S08010910C	25,00
Wi-Fi module for control with Superior App	N08013013C	245,00
GPRS for remote stove operation by SMS text	N08013005C	402,00
Combustion air kit	N08019032C	46,00
Flexible pipe Ø 6 cm for combustion air	N08011017	15,00 per linear metre

If a remote control is installed, a GPRS module and Wi-Fi cannot be installed.

GENERAL CHARACTERISTICS

Heating	forced ventilation
Cladding	painted steel
Top	majolica
Stove	steel
Firebox	cast iron
Baffle plate	cast iron
Brazier	cast iron
Door	cast iron
Door handle	painted steel, detachable
Standard flue outlet position	rear
Optional flue outlet	LH side
Remote control	optional
Display with digital controls	yes
Power levels	5
Ambient probe for temperature control	standard
Programmable timer-thermostat	6 daily time frames
Warm air outlets	front upper
Humidifier	optional
Ceramic glass	resistant up to 750°C
Glass cleaning system	continuous air flow
Brazier cleaning intervals	yes
Pellet level indicator	yes
Removable ash drawer	yes
Module WiFi- Bluetoothfor App MYSUPERIOR	optional
Module for SMS management	optional
Energy Saving	yes
Eco Function	yes
Installation	wall - corner

TECHNICAL DATA

Model		SAMANTA
Type		SP40/E-01
Energy efficiency class		A+
Room heating capacity	m³	170 - 295
Nominal heat output (min - max)	kW	4,7 - 10,2
Thermal efficiency (min - max)	%	88,2 - 88,1
Nominal consumption (min - max)	kg/h	1,1 - 2,3
Standard flue outlet Ø	cm	8
Hopper capacity	kg	30
Dimensions W x D x H	cm	58 x 51 x 116
Stove weight	kg	151

A+ ENERGY EFFIC. CLASS

SOLANGE

FORCED VENTILATION

DUCTABLE

NATURAL HEATING

Technical drawing on page 24.

Data chart on page 9.

	TOTAL PRICE
Total price including stove and painted steel cladding	3.515,00

	MODEL/COLOUR	CODE	EURO
Firebox with cladding	BIANCO	S07430110C	3.515,00
	BORDEAUX	S07430120C	3.515,00
	GRIGIO	S07430130C	3.515,00

ACCESSORIES ON REQUEST	CODE	EURO
Hot air ducting kit	S08012770C	210,00
Wall-mounted thermostat timer	N08013009C	110,00
Remote control	S08010900C	46,00
Right-hand or left-hand side flue kit	S08012590C	67,00
Humidifier	S08010910C	25,00
Wi-Fi module for control with Superior App	N08013013C	245,00
GPRS for remote stove operation by SMS text	N08013005C	402,00
Combustion air kit	N08019032C	46,00
Flexible pipe Ø 6 cm for combustion air	N08011017	15,00 per linear metre

If a remote control is installed, a GPRS module and Wi-Fi cannot be installed.

GENERAL CHARACTERISTICS

Heating	ductable forced ventilation
Cladding	painted steel
Top	cast iron with majolica insert
Stove	steel
Firebox	cast iron
Baffle plate	cast iron
Brazier	cast iron
Door	cast iron
Door handle	painted steel, detachable
Standard flue outlet position	rear
Optional flue outlet	RH side - LH side
Remote control	optional
Display with digital controls	yes
Power levels	5
Ambient probe for temperature control	standard
Programmable timer-thermostat	6 daily time frames
Warm air outlets	front upper
Humidifier	optional
Ceramic glass	resistant up to 750°C
Glass cleaning system	continuous air flow
Brazier cleaning intervals	yes
Pellet level indicator	yes
Hot air ducting kit	optional
Optional ambient thermostat	separate control of ventilation
Removable ash drawer	yes
Module WiFi- Bluetoothfor App MYSUPERIOR	optional
Module for SMS management	optional
Energy Saving	yes
Eco Function	yes
Night mode	yes
Installation	wall - corner

TECHNICAL DATA

Model		SOLANGE
Type		SP40/E-02
Energy efficiency class		A+
Room heating capacity	m³	170 - 295
Nominal heat output (min - max)	kW	4,7 - 10,2
Thermal efficiency (min - max)	%	88,2 - 88,1
Nominal consumption (min - max)	kg/h	1,1 - 2,3
Standard flue outlet Ø	cm	8
Hopper capacity	kg	32
Dimensions W x D x H	cm	62 x 59 x 124,5
Stove weight	kg	160

A+ ENERGY EFFIC. CLASS

Prices are considered to be without sales taxes. "SUPERIOR" - Gruppo Piazzetta S.p.A. reserves the right to make any technical and aesthetic changes without prior notice.Document reserved for the Gruppo Piazzetta S.p.A. sales organisation.

SONIA

FORCED VENTILATION

DUCTABLE

NATURAL HEATING

Technical drawing on page 24.

Data chart on page 9.

	TOTAL PRICE
Total price including stove and painted steel cladding	3.210,00

	MODEL/COLOUR	CODE	EURO
Firebox with cladding	BIANCO	S07370010C	3.210,00
	BORDEAUX	S07370020C	3.210,00
	GRIGIO	S07370030C	3.210,00

ACCESSORIES ON REQUEST	CODE	EURO
Hot air ducting kit [1]	S08012600C	210,00
Remote control	S08010900C	46,00
Right-hand or left-hand side flue kit	S08012840C	67,00
Humidifier	S08010910C	25,00
Wi-Fi module for control with Superior App	N08013013C	245,00
GPRS for remote stove operation by SMS text	N08013005C	402,00
Combustion air kit	N08019032C	46,00
Flexible pipe Ø 6 cm for combustion air	N08011017	15,00 per linear metre

[1] If the ducting kit is installed, the Night Mode cannot be activated.
If a remote control is installed, a GPRS module and Wi-Fi cannot be installed.

GENERAL CHARACTERISTICS

Heating	ductable forced ventilation
Cladding	painted steel
Top	cast iron with majolica insert
Stove	steel
Firebox	cast iron
Baffle plate	cast iron
Brazier	cast iron
Door	cast iron
Door handle	painted steel, detachable
Standard flue outlet position	rear
Optional flue outlet	RH side - LH side
Remote control	optional
Display with digital controls	yes
Power levels	5
Ambient probe for temperature control	standard
Programmable timer-thermostat	6 daily time frames
Warm air outlets	front upper
Humidifier	optional
Ceramic glass	resistant up to 750°C
Glass cleaning system	continuous air flow
Brazier cleaning intervals	yes
Pellet level indicator	yes
Hot air ducting kit	optional
Removable ash drawer	yes
Module WiFI- Bluetoothfor App MYSUPERIOR	optional
Module for SMS management	optional
Energy Saving	yes
Eco Function	yes
Night mode	yes
Installation	wall - corner

TECHNICAL DATA

Model		SONIA
Type		SP40/E-02
Energy efficiency class		A+
Room heating capacity	m³	170 - 295
Nominal heat output (min - max)	kW	4,7 - 10,2
Thermal efficiency (min - max)	%	88,2 - 88,1
Nominal consumption (min - max)	kg/h	1,1 - 2,3
Standard flue outlet Ø	cm	8
Hopper capacity	kg	32
Dimensions W x D x H	cm	61 x 53 x 123
Stove weight	kg	140

A+ ENERGY EFFIC. CLASS

SVEVA

FORCED VENTILATION

Technical drawing on page 24.

Data chart on page 9.

	TOTAL PRICE
Total price including stove and majolica cladding	3.690,00

	MODEL/COLOUR	CODE	EURO
Cladding	BLU ANTICO	S06071870C	965,00
	BORDEAUX	S06071420C	965,00
	SALE PEPE	S06071070C	965,00
	TERRA ORIENTE	S06071550C	965,00
Firebox	SVEVA	S07270000C	2.725,00

ACCESSORIES ON REQUEST	CODE	EURO
Remote control	S08011020C	45,00
Humidifier	S08010910C	25,00
Wi-Fi module for control with Superior App	N08013013C	245,00
GPRS for remote stove operation by SMS text	N08013005C	402,00
Combustion air kit	N08010009C	46,00
Flexible pipe Ø 6 cm for combustion air	N08011017	15,00 per linear metre

If a remote control is installed, a GPRS module and Wi-Fi cannot be installed.

GENERAL CHARACTERISTICS

Heating	forced ventilation
Cladding	majolica
Top	cast iron with majolica insert
Stove	steel
Firebox	cast iron
Baffle plate	cast iron
Brazier	cast iron
Door	cast iron
Door handle	painted steel, detachable
Standard flue outlet position	rear
Remote control	optional
Display with digital controls	yes
Power levels	5
Ambient probe for temperature control	standard
Programmable timer-thermostat	6 daily time frames
Warm air outlets	front upper
Humidifier	optional
Ceramic glass	resistant up to 750°C
Glass cleaning system	continuous air flow
Brazier cleaning intervals	yes
Pellet level indicator	yes
Removable ash drawer	yes
Module WiFI- Bluetoothfor App MYSUPERIOR	optional
Module for SMS management	optional
Energy Saving	yes
Eco Function	yes
Installation	wall - corner

TECHNICAL DATA

Model		SVEVA
Type		SP40/E-01
Energy efficiency class		A+
Room heating capacity	m³	170 - 295
Nominal heat output (min - max)	kW	4,7 - 10,2
Thermal efficiency (min - max)	%	88,2 - 88,1
Nominal consumption (min - max)	kg/h	1,1 - 2,3
Standard flue outlet Ø	cm	8
Hopper capacity	kg	30
Dimensions W x D x H	cm	64 x 54 x 115
Stove weight	kg	190

A+ ENERGY EFFIC. CLASS

Prices are considered to be without sales taxes. “SUPERIOR” - Gruppo Piazzetta S.p.A. reserves the right to make any technical and aesthetic changes without prior notice.Document reserved for the Gruppo Piazzetta S.p.A. sales organisation.

Accessories

HOT AIR DUCTING

	ITEM	COMPATIBLE MODELS	CODE	EURO
	Hot air ducting kit	LIA - LISA - MAYA - MILLY - SONIA	S08012600C	**210,00**
		RITA	S08012760C	**210,00**
		SOLANGE	S08012770C	**210,00**

HOT AIR DUCTING ACCESSORIES - HOT AIR OUTLETS

	ITEM	DIMENSIONS IN CM	UNITS PER PACK	CODE	EURO
	Flexible aluminium pipe [1]	Ø 7,5	linear metre	N08011005	**15,00** per linear metre
	Y-shaped element	Ø 7,5	10	N08011006	**25,00**
	90° aluminium bend	Ø 7,5	10	N08011007	**25,00**
	Pipe clamp	Ø 7,5	50	N08011008	**2,00**
	Connector sleeve	Ø 7,5	50	N08011009	**10,00**
	Air vent with closure, enamelled white	L 25 x H 12 Ø 7,5	10	N08011001	**46,00**
	Wall air vent with closure, enamelled white	L 25 x H 11 Ø 7,5	6	N08011002	**67,00**
	Wall air vent, blasted steel	L 22 x H 5 Ø 7,5	1	NI08012400-0	**124,00**
	Wall air vent, black enamelled steel	L 22 x H 5 Ø 7,5	1	NI08014190-0	**93,00**
	Wall air vent, white enamelled steel	L 22 x H 5 Ø 7,5	1	NI08014400-0	**93,00**
	Wall air vent, blasted steel	L 43 x H 5 Ø 7,5	1	NI08012410-0	**206,00**
	Wall air vent, black enamelled steel	L 43 x H 5 Ø 7,5	1	NI08014200-0	**175,00**
	Wall air vent, white enamelled steel	L 43 x H 5 Ø 7,5	1	NI08014410-0	**175,00**
	Air vent without closure, made of white-painted steel	L 9,5 x H 9,5 Ø 7,0	1	N08011003	**52,00**
	Air vent with closure, made of white-painted steel	L 9,5 x H 9,5 Ø 7,0	1	N08011004	**57,00**

[1] Available in 30-metre packs, minimum order quantity 1 metre.

PELLET STOVES

Accessories

REMOTE MANAGEMENT

	ITEM	COMPATIBLE MODELS	CODE	EURO
	Wi-Fi module for control through Superior App inclusive of serial cable and power supply [1]	All models RITA excluded	N08013013C	**245,00**
	Wi-Fi module for control through Superior App inclusive of serial cable and power supply	RITA	N08013023C	**285,00**
	GPRS module for managing the stove through SMS inclusive of serial cable and feeder	All models RITA excluded	N08013005C	**402,00**
	GPRS module for managing the stove through SMS inclusive of serial cable and feeder	RITA	NI08013005-0	**437,00**

[1] Compatible with all models produced or updated starting from 2013.

COMBUSTION AIR KIT AND ACCESSORIES

	ITEM	COMPATIBLE MODELS	CODE	EURO
	Combustion air kit	CLEMY - CLEO - GIOIA - LIA LISA - MAYA - MARCELLA MILLY - MONIA - MONICA	N08010012C	**83,00**
	Combustion air kit	RITA - SVEVA	N08010009C	**46,00**
	Combustion air kit	SABRINA - SALLY - SAMANTA SOLANGE - SONIA	N08019032C	**46,00**
	Flexible pipe Ø 6 cm for combustion air	All models	N08011017	**15,00** per linear metre
	Aeration grille with spring for wall hole Ø 6.0-7.5 cm, external Ø 16 cm	All models	N08010014	**5,00**

OTHER ACCESSORIES

	ITEM	COMPATIBLE MODELS	CODE	EURO
	Remote control	CLEO - GIOIA - LIA - LISA MILLY - MONIA - MONIA E MONICA - RITA - SABRINA SAMANTA - SOLANGE - SONIA	S08010900C	**46,00**
		CLEMY - MAYA - SALLY	S08012960C	**46,00**
		MARCELLA - SVEVA	S08011020C	**45,00**
	Right-hand or left-hand side flue kit	CLEMY - CLEO	S08011130C	**46,00**
	Rear / left-hand side flue kit	LIA - LISA - RITA	S08011650C	**51,00**
	Top central flue kit	LIA - LISA	N08011015C	**195,00**
	Right-hand or left-hand side flue kit	MILLY (R / L) - SONIA (R / L)	S08012840C	**67,00**
	Right-hand or left-hand side flue kit	MAYA (L) - MONIA (L) MONICA (R / L) - SABRINA (L) - SALLY (L) SAMANTA (L) - SOLANGE (R / L)	S08012590C	**67,00**
	Side left-hand flue kit	MONIA E	S08010920C	**45,00**
	Humidifier	All models	S08010910C	**25,00**

Prices are considered to be without sales taxes. "SUPERIOR" - Gruppo Piazzetta S.p.A. reserves the right to make any technical and aesthetic changes without prior notice.Document reserved for the Gruppo Piazzetta S.p.A. sales organisation.

Accessories

FLOOR PROTECTION

	ITEM	COMPATIBLE MODELS	DIMENSIONS IN CM	CODE	EURO
	Rectangular steel floor plate	All models	100x120	P08024300C	**265,00**
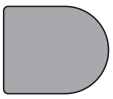	Round edged steel floor plate	All models	100x120	P08024310C	**265,00**

PIPES - BENDS - CONNECTORS FOR PELLET APPLIANCES

Aluminium coated steel connecting flue pipes single wall, 2 mm thick, V2 corrosion resistance class, EN 1856-2 compliant

	ITEM	DIMENSIONS IN CM	Ø MM	CODE	EURO
	Pipe with inspection	L 25	80	P08025890	**36,00**
	Pipe	L 25	80	P08025370	**31,00**
		L 50	80	P08025380	**52,00**
		L 100	80	P08025390	**77,00**
	Bend 90° with inspection	L 16 x H 16	80	P08025910	**77,00**
	Bend 90°	L 16 x H 16	80	P08025400	**72,00**
	Bend 45°	L 12 x H 12	80	P08025410	**52,00**
	T-fitting w/RH and LH side inspection port	L 14 x H 18	80	P08027250	**95,00**
	T-fitting w/support [1]	L 12 x H 17-22	80	P08027230	**120,00**
	T-fitting w/support [1]	L 12 x H 17-22	80-100	P08027240	**120,00**
	T-fitting w/inspection port	L 18 x H 14	80	P08025430	**82,00**
	Flue ring	-	80	P08025490	**26,00**
	Wall connector	-	80	P08025550	**26,00**

[1] Not compatible with CLEO, CLEMY, GIOIA.

Technical drawings

CLEMY

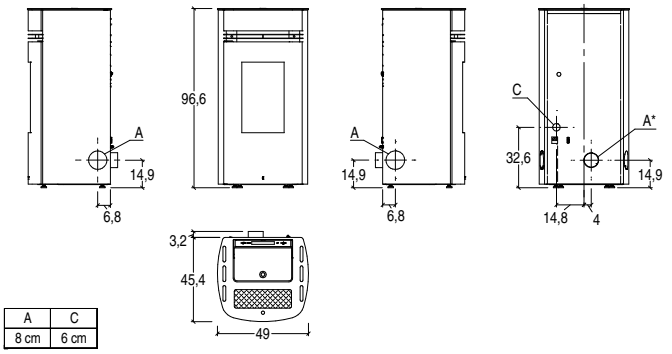

A	C
8 cm	6 cm

CLEO

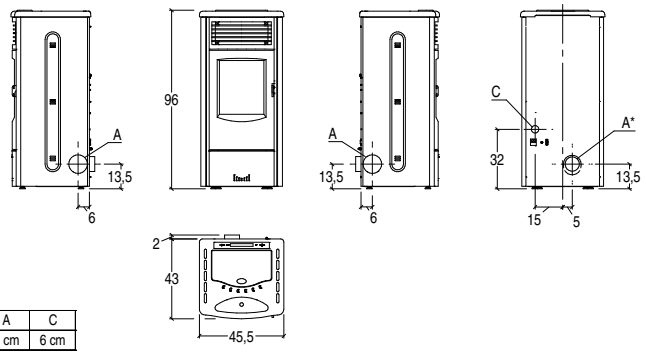

A	C
8 cm	6 cm

GIOIA

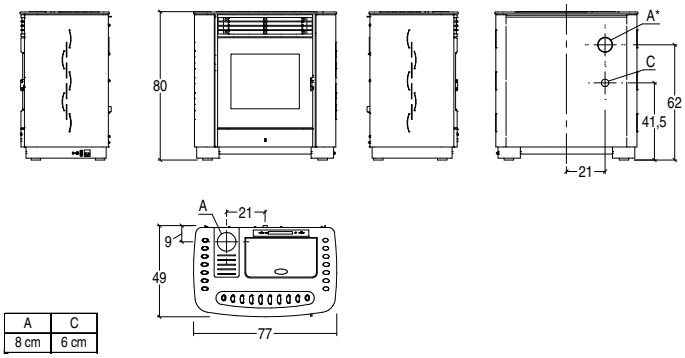

A	C
8 cm	6 cm

LIA

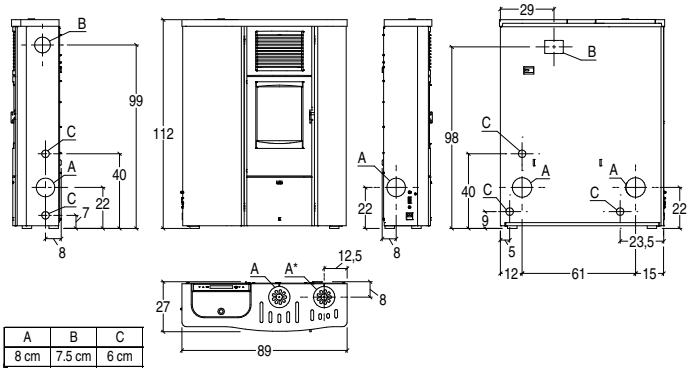

A	B	C
8 cm	7.5 cm	6 cm

LISA

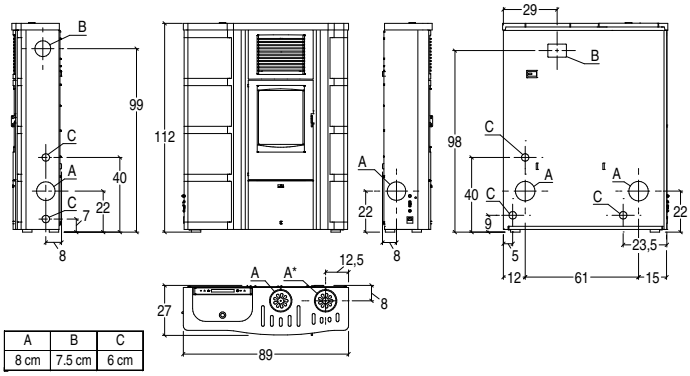

A	B	C
8 cm	7.5 cm	6 cm

MAYA

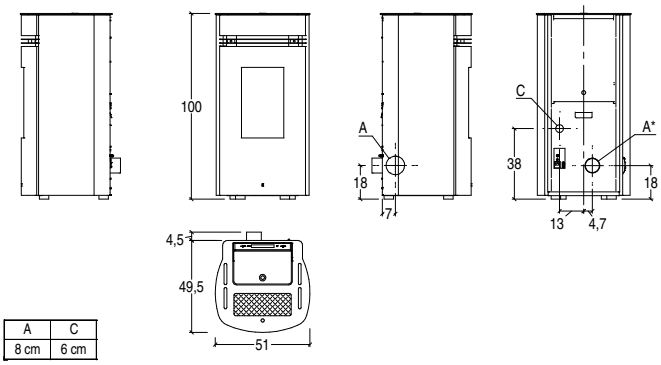

A	C
8 cm	6 cm

All drawing dimensions in cm.

KEY: **A** Flue outlet; **B** Warm air outlet; **C** Combustion air inlet.

Prices are considered to be without sales taxes. "SUPERIOR" - Gruppo Piazzetta S.p.A. reserves the right to make any technical and aesthetic changes without prior notice.Document reserved for the Gruppo Piazzetta S.p.A. sales organisation.

Technical drawings

MARCELLA

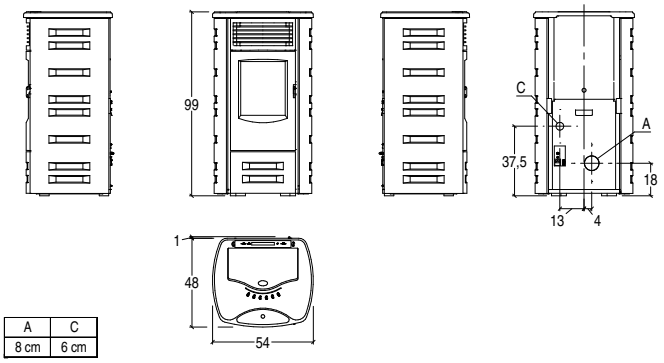

A	C
8 cm	6 cm

MILLY

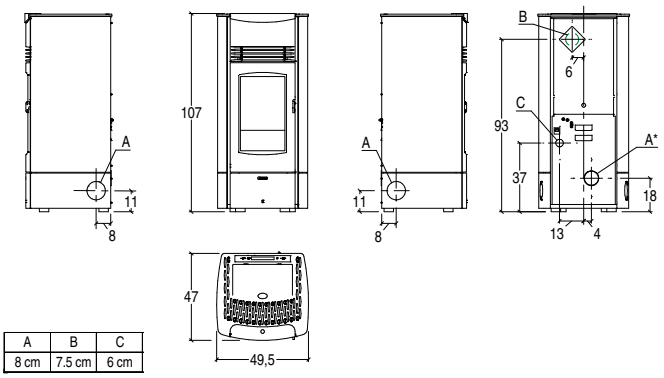

A	B	C
8 cm	7.5 cm	6 cm

MONIA

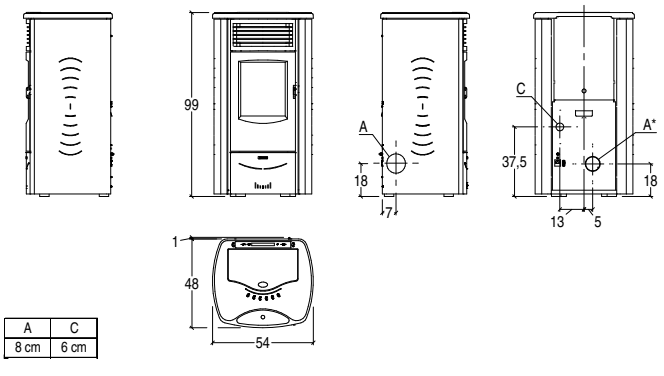

A	C
8 cm	6 cm

MONIA E

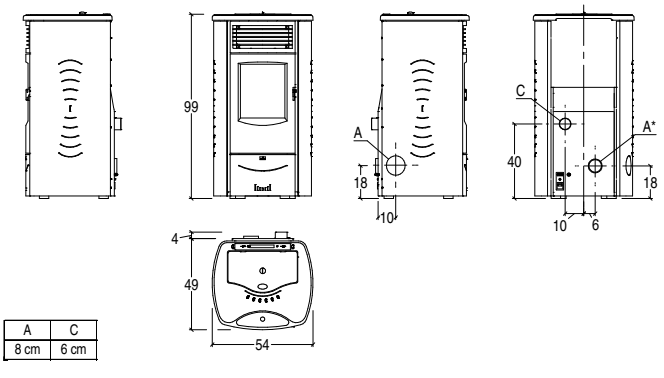

A	C
8 cm	6 cm

MONICA

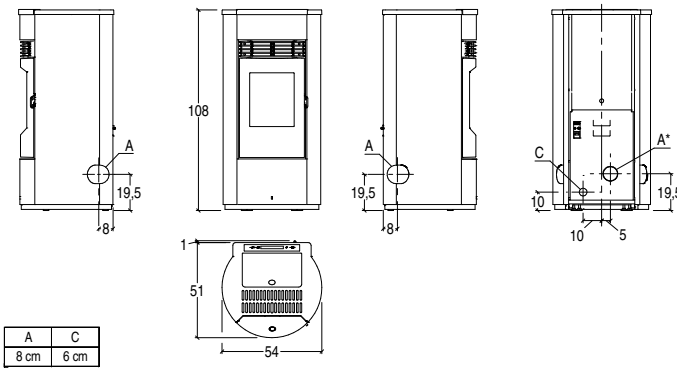

A	C
8 cm	6 cm

RITA

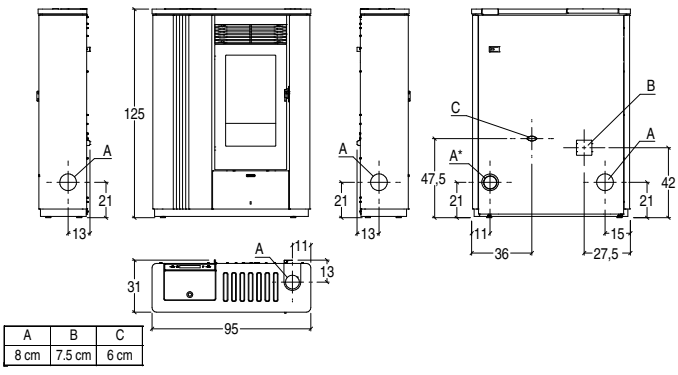

A	B	C
8 cm	7.5 cm	6 cm

All drawing dimensions in cm.

KEY: **A** Flue outlet; **B** Warm air outlet; **C** Combustion air inlet.

PELLET STOVES

Technical drawings

SABRINA

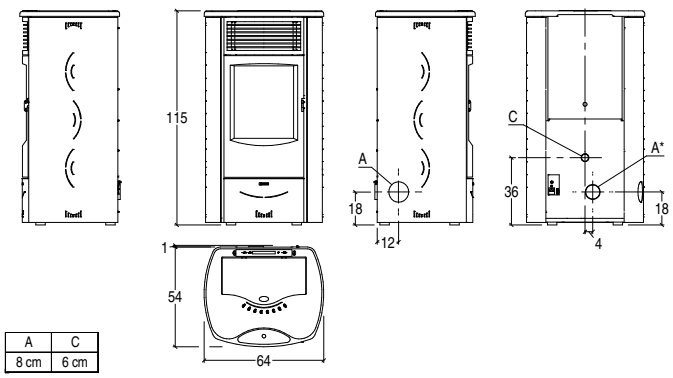

A	C
8 cm	6 cm

SALLY

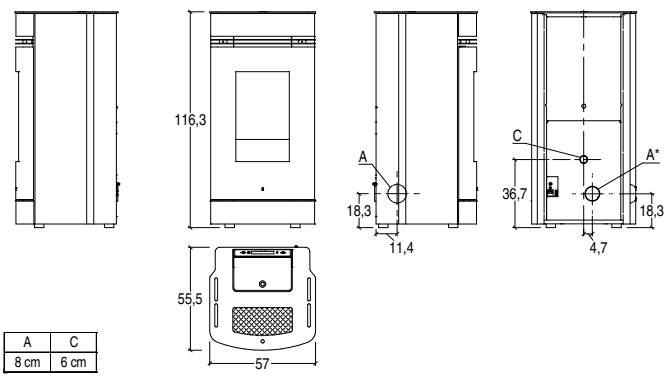

A	C
8 cm	6 cm

SAMANTA

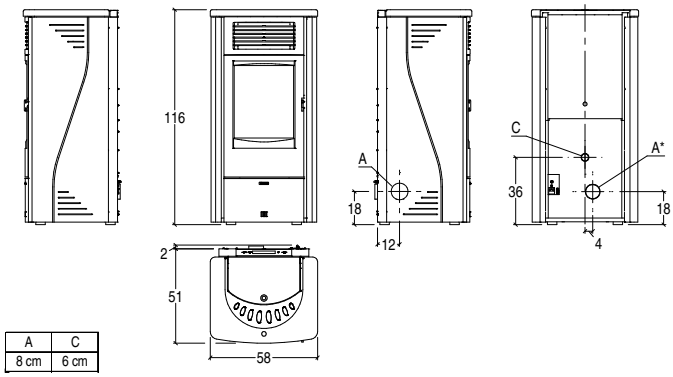

A	C
8 cm	6 cm

SOLANGE

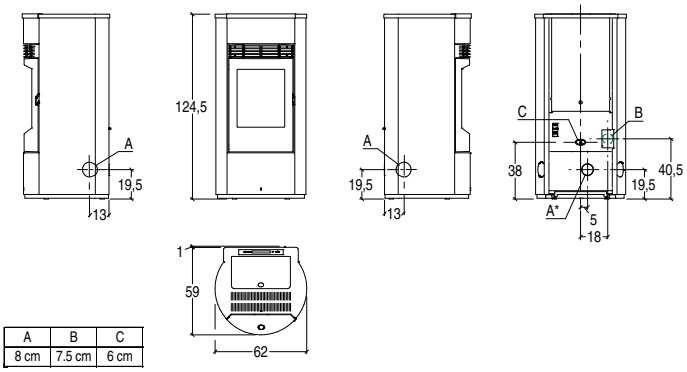

A	B	C
8 cm	7.5 cm	6 cm

SONIA

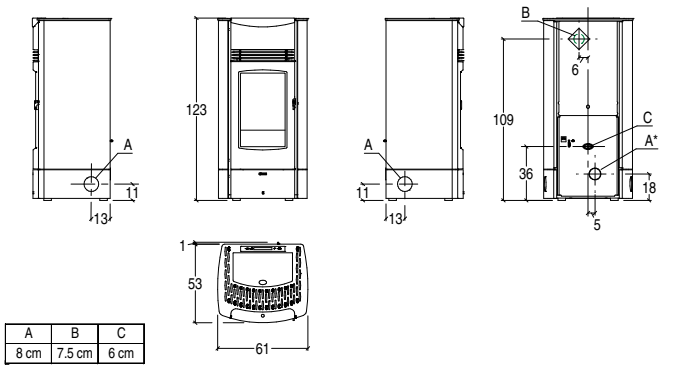

A	B	C
8 cm	7.5 cm	6 cm

SVEVA

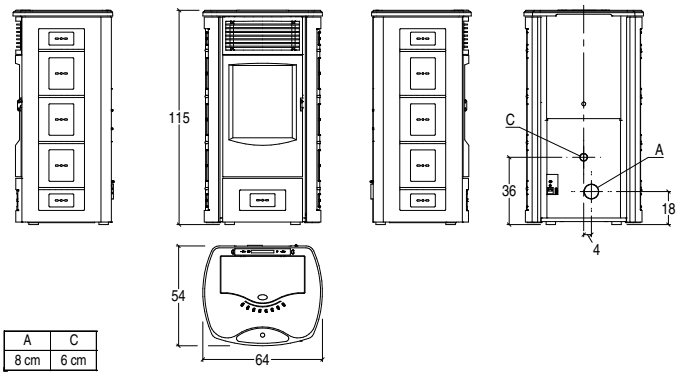

A	C
8 cm	6 cm

All drawing dimensions in cm.

KEY: **A** Flue outlet; **B** Warm air outlet; **C** Combustion air inlet.

Prices are considered to be without sales taxes. "SUPERIOR" - Gruppo Piazzetta S.p.A. reserves the right to make any technical and aesthetic changes without prior notice.Document reserved for the Gruppo Piazzetta S.p.A. sales organisation.

PELLET INSERTS

Data charts 26

SCP 7. 27
SCP 9. 28
SCP 11 29

Accessories 30

Technical drawings 32

Pellet inserts

Data charts

Technical data	Units	SCP 7	SCP 9	SCP 11
Forced ventilation		**yes**	**yes**	**yes**
Ductable		**-**	**-**	**-**
Natural convection		**-**	**-**	**-**
Hermetic		**-**	**-**	**-**
Model		SCP 7	SCP 9	SCP 11
Type		YP103-01	YP113-01	YP115-01
Energy efficiency class		A+	A+	A+
Dimensions W x D x H	cm	68 x 49 x 49	78 x 55 x 58	78 x 55 x 68
Nominal heat output (min - max)	kW	3,5 - 7	4,5 - 9	4,6 - 11
Thermal efficiency (min - max)	%	88.3 - 87.4	88.4 - 87.3	87.7 - 87.3
Nominal consumption (min - max)	kg/h	0.8 - 1.6	1 - 2.1	1 - 2.6
Standard flue outlet Ø	cm	8	8	8
Hopper capacity	kg	8	13	22
Stove weight	kg	100	140	150
Room heating capacity *	m³	120 - 200	150 - 260	185 - 315
Cladding		-	-	-
Top		-	-	-
Stove		steel, removable with sliding runners	steel, removable with sliding runners	steel, removable with sliding runners
Firebox		cast iron	cast iron	cast iron
Baffle plate		cast iron	cast iron	cast iron
Brazier		steel	steel	steel
Door		cast iron	cast iron	cast iron
Aesthetic door		-	-	-
Door handle		painted steel, detachable	painted steel, detachable	painted steel, detachable
Standard flue outlet position		LH top	LH top	LH top
Optional flue outlet		-	-	-
Remote control		-	-	-
Display with digital controls		yes	yes	yes
Power levels		4	5	5
Ambient probe for controlling the set temperature		yes	yes	yes
Programmable timer-thermostat		6 daily time frames	6 daily time frames	6 daily time frames
Warm air outlets		front upper	front upper	front upper
Humidifier		-	-	-
Ceramic glass		resistant up to 750°C	resistant up to 750°C	resistant up to 750°C
Glass cleaning system		continuous air flow	continuous air flow	continuous air flow
Brazier cleaning intervals		yes	yes	yes
Pellet level indicator		-	-	-
Pellet level sensor		yes	yes	yes
Hot air ducting kit		-	-	-
Optional ambient thermostat		-	-	-
Removable ash drawer		-	-	-
Module for the App Superior management		optional	optional	optional
Module for SMS management		-	-	-
Function control		wired in external display with wall mount room temperature sensor	wired in external display with wall mount room temperature sensor	wired in external display with wall mount room temperature sensor
Energy Saving		yes	yes	yes
Eco Function		yes	yes	yes
Night mode		-	-	-
Installation **		-	-	-
Flush installation		-	-	-
Page		27	28	29

* Calculated on the basis of nominal heat output, referring to rooms with a heating requirement between 0.060 and 0.035 kW per m³. We recommend always contacting a heating engineer for the final calculations.

** Please refer to the instruction manual for details regarding the type of installation.

Prices are considered to be without sales taxes. "SUPERIOR" - Gruppo Piazzetta S.p.A. reserves the right to make any technical and aesthetic changes without prior notice.Document reserved for the Gruppo Piazzetta S.p.A. sales organisation.

SCP 7

FORCED VENTILATION

Technical drawing on page 32.

Data chart on page 26.

	MODEL	CODE	EURO
Insert	SCP 7	S04806800C	**2.170,00**

ACCESSORIES ON REQUEST	CODE	EURO
Wi-Fi module for control with Superior App	N08013023C	**285,00**
Fixed rise kit: W 62 x D 40 x H 38 cm	N08019001C	**165,00**
Pellet-loading front tray kit	N08019003C	**290,00**
Kit containing tank with front loading, total capacity approx. 35 kg	N08019007C	**615,00**
Kit containing tank with right-hand or left-hand loading to be positioned on the chimney, total capacity approx. 45 kg	N08019009C	**495,00**
Kit containing tank with adjustable loading, total capacity approx. 18 kg	N08019005C	**320,00**
Front closure frame kit not compatible with front pellet loading drawer	N08014001C	**105,00**
Front closure frame kit compatible with front pellet loading drawer	N08014010C	**105,00**
Edge profile	N08014003C	**295,00**
Edge profile (Front tray kit for pellet loading, compatible)	N08014004C	**295,00**
Combustion air kit	N08010017C	**120,00**
Flexible pipe Ø 6 cm for combustion air	N08011017	**15,00** per linear metre
Ash vacuum cleaner	N08019019C	**80,00**

GENERAL CHARACTERISTICS

Fuel	pellet
Heating	forced ventilation
Stove	steel, removable with sliding runners
Firebox	cast iron
Brazier	steel
Door	cast iron
Door handle	painted steel, detachable
Opening	cast-iron door
Standard flue outlet position	LH top
Function control	wired in external display with wall mount room temperature sensor
Power levels	4
Programmable timer-thermostat	6 daily time frames
Warm air outlets	front upper
Ceramic glass	resistant up to 750°C
Glass cleaning system	continuous air flow
Brazier cleaning intervals	yes
Pellet level sensor	yes
Energy Saving	yes
Eco Function	yes
Ambient probe for controlling the set temperature	standard
Module for the App Superior management	optional
Ash vacuum cleaner	optional
Combustion air kit	optional
Feet kit	optional
Closing frame kit	optional
Kit containing pellet front-loading tray	optional
Adjustable front pellet loading	optional
Additional hopper with front- rear and R or L side loading	optional

TECHNICAL DATA

Model		SCP7
Type		YP103-01
Energy efficiency class		A+
Room heating capacity	m³	120 - 200
Nominal heat output (min - max)	kW	3,5 - 7,0
Thermal efficiency (min - max)	%	88,3 - 87,4
Nominal consumption (min - max)	kg/h	0,8 - 1,6
Standard flue outlet Ø	cm	8
Hopper capacity	kg	8
Dimensions W x D x H	cm	68 x 49 x 49
Weight	kg	100

A+ ENERGY EFFIC. CLASS

Prices are considered to be without sales taxes. "SUPERIOR" - Gruppo Piazzetta S.p.A. reserves the right to make any technical and aesthetic changes without prior notice.Document reserved for the Gruppo Piazzetta S.p.A. sales organisation.

SCP 9

FORCED VENTILATION

Technical drawing on page 32.

Data chart on page 26.

GENERAL CHARACTERISTICS

Fuel	pellet
Heating	forced ventilation
Stove	steel, removable with sliding runners
Firebox	cast iron
Brazier	steel
Door	cast iron
Door handle	painted steel, detachable
Opening	cast-iron door
Standard flue outlet position	LH top
Function control	wired in external display with wall mount room temperature sensor
Warm air outlets	front upper
Power levels	5
Programmable timer-thermostat	6 daily time frames
Ceramic glass	resistant up to 750°C
Glass cleaning system	continuous air flow
Brazier cleaning intervals	yes
Pellet level sensor	yes
Energy Saving	yes
Eco Function	yes
Ambient probe for controlling the set temperature	standard
Module for the App Superior management	optional
Ash vacuum cleaner	optional
Combustion air kit	optional
Feet kit	optional
Closing frame kit	optional
Kit containing pellet front-loading tray	optional
Adjustable front pellet loading	optional
Additional hopper with front- rear and R or L side loading	optional

	MODEL	CODE	EURO
Insert	SCP 9	S04807800C	**2.605,00**

ACCESSORIES ON REQUEST	CODE	EURO
Wi-Fi module for control with Superior App	N08013023C	**285,00**
Fixed rise kit: W 72 x D 45 x H 38 cm	N08019002C	**165,00**
Pellet-loading front tray kit	N08019004C	**325,00**
Kit containing tank with front loading, total capacity approx. 42 kg	N08019008C	**660,00**
Kit containing tank with right-hand or left-hand loading to be positioned on the chimney, total capacity approx. 52 kg	N08019010C	**545,00**
Kit containing tank with adjustable loading, total capacity approx. 23 kg	N08019006C	**370,00**
Front closure frame kit not compatible with front pellet loading drawer	N08014002C	**105,00**
Front closure frame kit compatible with front pellet loading drawer	N08014011C	**105,00**
Edge profile	N08014005C	**295,00**
Edge profile (Front tray kit for pellet loading, compatible)	N08014006C	**295,00**
Combustion air kit	N08010018C	**120,00**
Flexible pipe Ø 6 cm for combustion air	N08011017	**15,00** per linear metre
Ash vacuum cleaner	N08019019C	**80,00**

TECHNICAL DATA

Model		SCP9
Type		YP113-01
Energy efficiency class		A+
Room heating capacity	m³	150 - 260
Nominal heat output (min - max)	kW	4,5 - 9
Thermal efficiency (min - max)	%	88,4 - 87,3
Nominal consumption (min - max)	kg/h	1,0 - 2,1
Standard flue outlet Ø	cm	8
Hopper capacity	kg	13
Dimensions W x D x H	cm	78 x 55 x 58
Weight	kg	140

A+ ENERGY EFFIC. CLASS

Prices are considered to be without sales taxes. "SUPERIOR" - Gruppo Piazzetta S.p.A. reserves the right to make any technical and aesthetic changes without prior notice.Document reserved for the Gruppo Piazzetta S.p.A. sales organisation.

SCP 11

FORCED VENTILATION

Technical drawing on page 32.

Data chart on page 26.

	MODEL	CODE	EURO
Insert	SCP 11	S04808800C	**2.715,00**

ACCESSORIES ON REQUEST	CODE	EURO
Wi-Fi module for control with Superior App	N08013023C	**285,00**
Fixed rise kit: W 72 x D 45 x H 38 cm	N08019002C	**165,00**
Pellet-loading front tray kit	N08019004C	**325,00**
Kit containing tank with front loading, total capacity approx. 42 kg	N08019016C	**705,00**
Kit containing tank with right-hand or left-hand loading to be positioned on the chimney, total capacity approx. 52 kg	N08019015C	**570,00**
Kit containing tank with adjustable loading, total capacity approx. 23 kg	N08019017C	**370,00**
Front closure frame kit not compatible with front pellet loading drawer	N08014007C	**115,00**
Front closure frame kit compatible with front pellet loading drawer	N08014012C	**115,00**
Edge profile	N08014008C	**295,00**
Edge profile (Front tray kit for pellet loading, compatible)	N08014009C	**295,00**
Combustion air kit	N08010018C	**120,00**
Flexible pipe Ø 6 cm for combustion air	N08011017	**15,00** per linear metre
Ash vacuum cleaner	N08019019C	**80,00**

GENERAL CHARACTERISTICS

Fuel	pellet
Heating	forced ventilation
Stove	steel, removable with sliding runners
Firebox	cast iron
Brazier	steel
Door	cast iron
Door handle	painted steel, detachable
Opening	cast-iron door
Standard flue outlet position	LH top
Function control	wired in external display with wall mount room temperature sensor
Power levels	4
Programmable timer-thermostat	6 daily time frames
Warm air outlets	front upper
Ceramic glass	resistant up to 750°C
Glass cleaning system	continuous air flow
Brazier cleaning intervals	yes
Pellet level sensor	yes
Energy Saving	yes
Eco Function	yes
Ambient probe for controlling the set temperature	standard
Module for the App Superior management	optional
Ash vacuum cleaner	optional
Combustion air kit	optional
Feet kit	optional
Closing frame kit	optional
Kit containing pellet front-loading tray	optional
Adjustable front pellet loading	optional
Additional hopper with front- rear and R or L side loading	optional

TECHNICAL DATA

Model		SCP11
Type		YP115-01
Energy efficiency class		A+
Room heating capacity	m³	185 - 315
Nominal heat output (min - max)	kW	4,6 - 11,0
Thermal efficiency (min - max)	%	87,7 - 87,3
Nominal consumption (min - max)	kg/h	1,0 - 2,6
Standard flue outlet Ø	cm	8
Hopper capacity	kg	22
Dimensions W x D x H	cm	78 x 55 x 68
Weight	kg	150

A+ ENERGY EFFIC. CLASS

PELLET INSERTS

Accessories

ACCESSORIES FOR PELLET INSERTS

	ITEM	COMPATIBLE MODELS	CODE	EURO
	Fixed rise kit: W 62 x D 40 x H 38 cm	SCP 7	N08019001C	**165,00**
	Fixed rise kit: W 72 x D 45 x H 38 cm	SCP 9 - SCP 11	N08019002C	**165,00**
	Pellet-loading front tray kit	SCP 7	N08019003C	**290,00**
	Pellet-loading front tray kit	SCP 9 - SCP 11	N08019004C	**325,00**
	Kit containing tank with front loading, total capacity approx. 35 kg	SCP 7	N08019007C	**615,00**
	Kit containing tank with front loading, total capacity approx. 42 kg	SCP 9	N08019008C	**660,00**
	Kit containing tank with front loading, total capacity approx. 42 kg	SCP 11	N08019016C	**705,00**
	Kit containing tank with right-hand or left-hand loading to be positioned on the chimney, total capacity approx. 45 kg	SCP 7	N08019009C	**495,00**
	Kit containing tank with right-hand or left-hand loading to be positioned on the chimney, total capacity approx. 52 kg	SCP 9	N08019010C	**545,00**
	Kit containing tank with right-hand or left-hand loading to be positioned on the chimney, total capacity approx. 52 kg	SCP 11	N08019015C	**570,00**
	Kit containing tank with adjustable loading, total capacity approx. 18 kg	SCP 7	N08019005C	**320,00**
	Kit containing tank with adjustable loading, total capacity approx. 23 kg	SCP 9	N08019006C	**370,00**
	Kit containing tank with adjustable loading, total capacity approx. 23 kg	SCP 11	N08019017C	**370,00**
	Front closure frame kit not compatible with front pellet loading drawer	SCP 7	N08014001C	**105,00**
	Front closure frame kit not compatible with front pellet loading drawer	SCP 9	N08014002C	**105,00**
	Front closure frame kit not compatible with front pellet loading drawer	SCP 11	N08014007C	**115,00**
	Front closure frame kit compatible with front pellet loading drawer	SCP 7	N08014010C	**105,00**
	Front closure frame kit compatible with front pellet loading drawer	SCP 9	N08014011C	**105,00**
	Front closure frame kit compatible with front pellet loading drawer	SCP 11	N08014012C	**115,00**
	Edge profile	SCP 7	N08014003C	**295,00**
	Edge profile	SCP 9	N08014005C	**295,00**
	Edge profile	SCP 11	N08014008C	**295,00**
	Edge profile (Front tray kit for pellet loading, compatible)	SCP 7	N08014004C	**295,00**
	Edge profile (Front tray kit for pellet loading, compatible)	SCP 9	N08014006C	**295,00**
	Edge profile (Front tray kit for pellet loading, compatible)	SCP 11	N08014009C	**295,00**

Prices are considered to be without sales taxes. "SUPERIOR" - Gruppo Piazzetta S.p.A. reserves the right to make any technical and aesthetic changes without prior notice.Document reserved for the Gruppo Piazzetta S.p.A. sales organisation.

PELLET INSERTS

Accessories

REMOTE MANAGEMENT

	ITEM	COMPATIBLE MODELS	CODE	EURO
	Wi-Fi module for control with Superior App	All models	N08013023C	**285,00**

COMBUSTION AIR KIT

	ITEM	COMPATIBLE MODELS	CODE	EURO
	Combustion air kit	SCP 7	N08010017C	**120,00**
	Combustion air kit	SCP 9 - SCP 11	N08010018C	**120,00**
	Flexible pipe Ø 6 cm for combustion air	All models	N08011017	**15,00** per linear metre
	Aeration grille with spring for wall hole Ø 6.0-7.5 cm, external Ø 16 cm	All models	N08010014	**5,00**

PIPES - BENDS - CONNECTORS FOR PELLET INSERTS

Aluminium coated steel connecting flue pipes single wall, 2 mm thick, V2 corrosion resistance class, EN 1856-2 compliant

	ITEM	DIMENSIONS IN CM	Ø MM	CODE	EURO
	Pipe with inspection	L 25	80	P08025890	**36,00**
	Pipe	L 25	80	P08025370	**31,00**
	Pipe	L 50	80	P08025380	**52,00**
	Pipe	L 100	80	P08025390	**77,00**
	Bend 90° with inspection	L 16 x H 16	80	P08025910	**77,00**
	Bend 90°	L 16 x H 16	80	P08025400	**72,00**
	Bend 45°	L 12 x H 12	80	P08025410	**52,00**
	Flue ring	-	80	P08025490	**26,00**
	Wall connector	-	80	P08025550	**26,00**

Prices are considered to be without sales taxes. "SUPERIOR" - Gruppo Piazzetta S.p.A. reserves the right to make any technical and aesthetic changes without prior notice.Document reserved for the Gruppo Piazzetta S.p.A. sales organisation.

Technical drawings

SCP 7

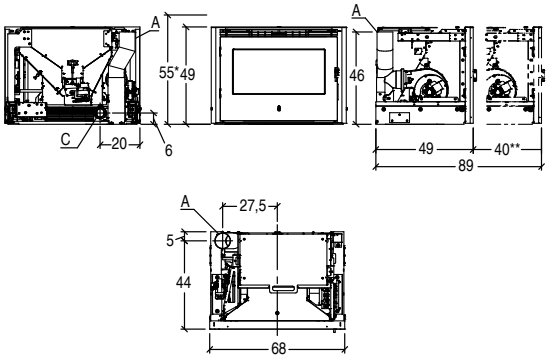

A	C
8 cm	6 cm

* Height with optional front pellet-loading tray
** P02907100C

SCP 9

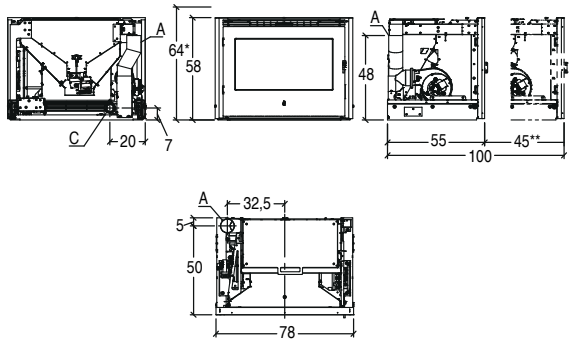

A	C
8 cm	6 cm

* Height with optional front pellet-loading tray
** P02907100C

SCP 11

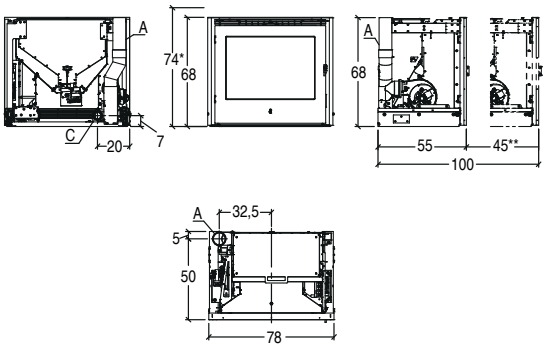

A	C
8 cm	6 cm

* Height with optional front pellet-loading tray
** P02907100C

All drawing dimensions in cm.

Prices are considered to be without sales taxes. “SUPERIOR” - Gruppo Piazzetta S.p.A. reserves the right to make any technical and aesthetic changes without prior notice.Document reserved for the Gruppo Piazzetta S.p.A. sales organisation.

PELLET STOVES - THERMO

Data charts 34

TAMARA TH 35
TANYA TH 36
TERRY TH 37

Accessories 38

Technical drawings 40

Pellet boiler stoves

Data charts

Technical data	Units	TAMARA TH	TANYA TH	TERRY TH
Hot water production		**yes**	**yes**	**yes**
Forced ventilation		**yes**	**yes**	**yes**
Model		TAMARA TH	TANYA TH	TERRY TH
Type		SP281-04	SP60-02	SP181-04
Energy efficiency class		A+	A+	A+
Dimensions W x D x H	cm	57,7 x 65,7 x 126	62 x 58 x 122	102 x 32 x 131
Nominal heat output (min - max)	kW	7,4 - 19,6	5,1 - 13,9	5,6 - 13,2
Heat output to water (min - max)	kW	6,3 - 17,3	5,0 - 12,5	4,0 - 10,4
Thermal efficiency (min - max)	%	94,4 - 93,0	89,6 - 92,6	91,5 - 92,5
Nominal consumption (min - max)	kg/h	1,6 - 4,3	1,1 - 3,0	1,2 - 2,9
Standard flue outlet Ø	cm	10	8	8
Hopper capacity	kg	52	35	18
Boiler capacity	kg	22	23,5	23
Maximum operating pressure	bar	1,5	1,5	1,5
3 bar relief valve	Ø	1/2"	1/2"	1/2"
System delivery	Ø	3/4"	3/4"	3/4"
System return	Ø	3/4"	3/4"	3/4"
System filling	Ø	1/2"	1/2"	1/2"
Stove weight	kg	200	193	200
Cladding		painted steel	painted steel	painted steel
Top		steel	steel	steel
Stove		steel	steel	steel
Boiler		steel	steel	steel
Firebox		steel	steel - Aluker®	steel - Aluker®
Baffle plate		steel	steel	steel
Brazier		cast iron	cast iron	steel
Conveyor		steel	-	steel
Heat exchanger cleaning system		rotating scrapers	rotating scrapers	rotating scrapers
Expansion tank		standard	standard	standard
Standard circulator		high efficiency	high efficiency	high efficiency
Safety valve and relief valve		standard	standard	standard
Door		cast iron	cast iron	cast iron
Door handle		painted steel, detachable	painted steel, detachable	painted steel, detachable
Standard flue outlet position		LH rear	LH rear	RH rear - RH side - RH top
Optional flue outlet		LH side	LH side	-
Function control		panel with display and digital controls	control panel with digital controls	panel with display and digital controls
Power levels		16 automatic power levels based on set water temperature	16 automatic power levels based on set water temperature	16 automatic power levels based on set water temperature
Programmable timer-thermostat		6 daily time frames	6 daily time frames	6 daily time frames
Ceramic glass		resistant up to 750°C	resistant up to 750°C	resistant up to 750°C
Glass cleaning system		continuous air flow	continuous air flow	continuous air flow
Brazier cleaning intervals		yes	yes	yes
Pellet level indicator		yes	yes	yes
Energy Saving		yes	yes	yes
Eco Function		yes	yes	yes
Anti-freeze Function		yes	yes	yes
Probe for managing storage tank		standard	standard	standard
Probe for managing SHW storage tank		standard	standard	standard
Can be connected to an external thermostat		yes	yes	yes
Aux control		yes	yes	yes
Ash pan		-	yes	-
Flue gas chamber ash pan		removable	-	-
Electronically-controlled anti-condensation valve		optional	-	optional
Combustion air kit		optional	optional	optional
Ventilation		standard	standard	standard
Module for the App Superior management		optional	optional	optional
Module for SMS management		optional	optional	optional
Installation **		wall - flush / corner	wall - corner	wall - flush
Flush installation		yes	-	yes
Page		35	36	37

* Please refer to the instruction manual for details regarding the type of installation.

Prices are considered to be without sales taxes. "SUPERIOR" - Gruppo Piazzetta S.p.A. reserves the right to make any technical and aesthetic changes without prior notice.Document reserved for the Gruppo Piazzetta S.p.A. sales organisation.

TAMARA TH

THERMO

FORCED VENTILATION

Technical drawing on page 40.

Data chart on page 34.

	TOTAL PRICE
Total price including stove and painted steel cladding	5.615,00

	MODEL/COLOUR	CODE	EURO
Firebox with cladding	BIANCO	S07550110C	5.615,00
	BORDEAUX	S07550120C	5.615,00
	GRIGIO	S07550130C	5.615,00

ACCESSORIES ON REQUEST	CODE	EURO
Kit for connection to the hydraulic system comprising manometer, ball valves and fittings	N08019014C	45,00
Side left-hand flue kit	P08060830C	62,00
Wi-Fi module for control with Superior App	N08013013C	245,00
GPRS for remote stove operation by SMS text	N08013005C	402,00
Combustion air kit	N08010011C	30,00
Flexible pipe Ø 6 cm for combustion air	N08011017	15,00 per linear metre

GENERAL CHARACTERISTICS

Heating	hot water production - forced ventilation
Cladding	painted steel
Top	steel
Stove	steel
Boiler	steel
Firebox	steel
Baffle plate	steel
Brazier	cast iron
Conveyor	steel
Heat exchanger cleaning system	rotating scrapers
Expansion tank	standard
Standard circulator	high efficiency
Safety valve and relief valve	standard
Door	cast iron
Door handle	painted steel, detachable
Standard flue outlet position	LH rear
Optional flue outlet	LH side
Function control	panel with display and digital controls
Power levels	16 automatic power levels based on set water temperature
Programmable timer-thermostat	6 daily time frames
Ceramic glass	resistant up to 750°C
Glass cleaning system	continuous air flow
Brazier cleaning intervals	yes
Pellet level indicator	yes
Energy Saving	yes
Eco Function	yes
Anti-freeze Function	yes
Probe for managing storage tank	standard
Probe for managing SHW storage tank	standard
Can be connected to an external thermostat	yes
Aux control	yes
Flue gas chamber ash pan	removable
Electronically-controlled anti-condensation valve	optional
Combustion air kit	optional
Ventilation	standard
Wi-Fi module for control with Superior App	optional
Module for SMS management	optional
Installation	wall - flush / corner
Flush installation	yes

TECHNICAL DATA

Model		TAMARA TH
Type		SP281-04
Energy efficiency class		A+
Nominal heat output (min - max)	kW	7,4 - 19,6
Heat output to water (min - max)	kW	6,3 - 17,3
Thermal efficiency (min - max)	%	94,4 - 93,0
Nominal consumption (min - max)	kg/h	1,6 - 4,3
Nominal voltage	V-Hz	230 - 50
Standard flue outlet Ø	cm	10
Hopper capacity	kg	52
Boiler capacity	l	22,0
Maximum operating pressure	bar	1,5
3 bar relief valve	Ø	1/2"
System delivery	Ø	3/4"
System return	Ø	3/4"
System filling	Ø	1/2"
Dimensions W x D x H	cm	57,7 x 65,7 x 126
Stove weight	kg	200

A+ ENERGY EFFIC. CLASS

TANYA TH

THERMO

FORCED VENTILATION

Technical drawing on page 40.

Data chart on page 34.

	TOTAL PRICE
Total price including stove and painted steel cladding	5.120,00

	MODEL/COLOUR	CODE	EURO
Firebox with cladding	BIANCO	S07570110C	5.120,00
	BORDEAUX	S07570120C	5.120,00
	GRIGIO	S07570130C	5.120,00

ACCESSORIES ON REQUEST	CODE	EURO
Kit for connection to the hydraulic system comprising manometer, ball valves and fittings	N08019012C	140,00
Side left-hand flue kit	N08010016C	46,00
Wi-Fi module for control with Superior App	N08013013C	245,00
GPRS for remote stove operation by SMS text	N08013005C	402,00
Combustion air kit	N08010011C	30,00
Flexible pipe Ø 6 cm for combustion air	N08011017	15,00 per linear metre

GENERAL CHARACTERISTICS

Heating	hot water production - forced ventilation
Cladding	painted steel
Top	steel
Stove	steel
Boiler	steel
Firebox	steel - Aluker®
Baffle plate	steel
Brazier	cast iron
Heat exchanger cleaning system	rotating scrapers
Expansion tank	standard
Standard circulator	high efficiency
Safety valve and relief valve	standard
Door	cast iron
Door handle	painted steel, detachable
Standard flue outlet position	LH rear
Optional flue outlet	LH side
Function control	control panel with digital controls
Power levels	16 automatic power levels based on set water temperature
Programmable timer-thermostat	6 daily time frames
Ceramic glass	resistant up to 750°C
Glass cleaning system	continuous air flow
Brazier cleaning intervals	yes
Pellet level indicator	yes
Energy Saving	yes
Eco Function	yes
Anti-freeze Function	yes
Probe for managing storage tank	standard
Probe for managing SHW storage tank	standard
Can be connected to an external thermostat	yes
Aux control	yes
Ash pan	removable
Combustion air kit	optional
Ventilation	standard
Module for the App Superior management	optional
Module for SMS management	optional
Installation	wall - corner

TECHNICAL DATA

Model		TANYA TH
Type		SP60-02
Energy efficiency class		A+
Nominal heat output (min - max)	kW	5,1 - 13,9
Heat output to water (min - max)	kW	4,1 - 12,1
Thermal efficiency (min - max)	%	89,6 - 92,6
Nominal consumption (min - max)	kg/h	1,1 - 3,0
Nominal voltage	V-Hz	230 - 50
Standard flue outlet Ø	cm	8
Hopper capacity	kg	35
Boiler capacity	l	23,5
Maximum operating pressure	bar	1,5
3 bar relief valve	Ø	1/2"
System delivery	Ø	3/4"
System return	Ø	3/4"
System filling	Ø	1/2"
Dimensions W x D x H	cm	62 x 58 x 122
Stove weight	kg	193

A+ ENERGY EFFIC. CLASS

Prices are considered to be without sales taxes. "SUPERIOR" - Gruppo Piazzetta S.p.A. reserves the right to make any technical and aesthetic changes without prior notice.Document reserved for the Gruppo Piazzetta S.p.A. sales organisation.

TERRY TH

THERMO

FORCED VENTILATION

Technical drawing on page 40.

Data chart on page 34.

	TOTAL PRICE
Total price including stove and painted steel cladding	6.170,00

	MODEL/COLOUR	CODE	EURO
Firebox with cladding	BIANCO	S07560110C	6.170,00
	BORDEAUX	S07560120C	6.170,00
	GRIGIO	S07560130C	6.170,00

ACCESSORIES ON REQUEST	CODE	EURO
Kit for connection to the hydraulic system comprising manometer, ball valves and fittings	N08019014C	45,00
Wi-Fi module for control with Superior App	N08013023C	285,00
GPRS for remote stove operation by SMS text	NI08013005-0	437,00
Combustion air kit	N08010011C	30,00
Flexible pipe Ø 6 cm for combustion air	N08011017	15,00 per linear metre

GENERAL CHARACTERISTICS

Heating	hot water production - forced ventilation
Cladding	painted steel
Top	steel
Stove	steel
Boiler	steel
Firebox	steel - Aluker®
Baffle plate	steel
Brazier	steel
Conveyor	steel
Heat exchanger cleaning system	rotating scrapers
Expansion tank	standard
Standard circulator	high efficiency
Safety valve and relief valve	standard
Door	cast iron
Door handle	painted steel, detachable
Standard flue outlet position	RH rear - RH side - RH top
Function control	panel with display and digital controls
Power levels	16 automatic power levels based on set water temperature
Programmable timer-thermostat	6 daily time frames
Ceramic glass	resistant up to 750°C
Glass cleaning system	continuous air flow
Brazier cleaning intervals	yes
Pellet level indicator	yes
Energy Saving	yes
Eco Function	yes
Anti-freeze Function	yes
Probe for managing storage tank	standard
Probe for managing SHW storage tank	standard
Can be connected to an external thermostat	yes
Aux control	yes
Electronically-controlled anti-condensation valve	optional
Combustion air kit	optional
Ventilation	standard
Module for the App Superior management	optional
Module for SMS management	optional
Installation	wall - flush
Flush installation	yes

TECHNICAL DATA

Model		TERRY TH
Type		SP181-04
Nominal heat output (min - max)	kW	5,6 - 13,2
Energy efficiency class		A+
Heat output to water (min - max)	kW	4,0 - 10,4
Thermal efficiency (min - max)	%	91,5 - 92,5
Nominal consumption (min - max)	kg/h	1,2 - 2,9
Nominal voltage	V-Hz	230 - 50
Standard flue outlet Ø	cm	8
Hopper capacity	kg	18
Boiler capacity	l	23,0
Maximum operating pressure	bar	1,5
3 bar relief valve	Ø	1/2"
System delivery	Ø	3/4"
System return	Ø	3/4"
System filling	Ø	1/2"
Dimensions W x D x H	cm	102 x 32 x 131
Stove weight	kg	200

A+ ENERGY EFFIC. CLASS

Accessories

CONNECTION TO HYDRAULIC CIRCUIT

	ITEM	COMPATIBLE MODELS	CODE	EURO
	Kit for connection to the hydraulic system comprising manometer, ball valves and fittings	TANYA TH	N08019012C	**140,00**
	Kit for connection to the hydraulic system comprising manometer, ball valves and fittings	TAMARA TH TERRY TH	N08019014C	**45,00**

REMOTE MANAGEMENT

	ITEM	COMPATIBLE MODELS	CODE	EURO
	Wi-Fi module for control through Superior App inclusive of serial cable and power supply [1]	TAMARA TH TANYA TH	N08013013C	**245,00**
		TERRY TH	N08013023C	**285,00**
	GPRS module for managing the stove through SMS inclusive of serial cable and feeder	TAMARA TH TANYA TH	N08013005C	**402,00**
		TERRY TH	NI08013005-0	**437,00**

[1] Compatible with all models produced or updated starting from 2013.

COMBUSTION AIR KIT

	ITEM	COMPATIBLE MODELS	CODE	EURO
	Combustion air kit	TAMARA TH TANYA TH TERRY TH	N08010011	**30,00**
	Flexible pipe Ø 6 cm for combustion air	TAMARA TH TANYA TH TERRY TH	N08011017	**15,00** per linear metre
	Aeration grille with spring for wall hole Ø 6.0-7.5 cm, external Ø 16 cm	TAMARA TH TANYA TH TERRY TH	N08010014	**5,00**

OTHER ACCESSORIES

	ITEM	COMPATIBLE MODELS	CODE	EURO
	Side left-hand flue kit	TANYA TH	N08010016C	**46,00**
	Side left-hand flue kit	TAMARA TH	P08060830C	**62,00**

FLOOR PROTECTION

	ITEM	COMPATIBLE MODELS	DIMENSIONS IN CM	CODE	EURO
	Rectangular steel floor plate	TAMARA TH TANYA TH TERRY TH	100x120	P08024300	**265,00**
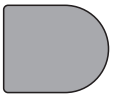	Round edged steel floor plate	TAMARA TH TANYA TH TERRY TH	100x120	P08024310	**265,00**

CLEANING AND MAINTENANCE ACCESSORIES

	ITEM	COMPATIBLE MODELS	CODE	EURO
	Cleaning rod	All models	P08061290C	**40,00**

Prices are considered to be without sales taxes. "SUPERIOR" - Gruppo Piazzetta S.p.A. reserves the right to make any technical and aesthetic changes without prior notice.Document reserved for the Gruppo Piazzetta S.p.A. sales organisation.

Accessories

PIPES - BENDS - CONNECTORS FOR PELLET BOILER APPLIANCES

Aluminium coated steel connecting flue pipes single wall, 2 mm thick, V2 corrosion resistance class, EN 1856-2 compliant

	ITEM	DIMENSIONS IN CM	Ø MM	COMPATIBLE MODELS	CODE	EURO
	Pipe with inspection	L 25	80	TANYA TH - TERRY TH	P08025890	**36,00**
	Pipe	L 25	80	TANYA TH - TERRY TH	P08025370	**31,00**
		L 50	80	TANYA TH - TERRY TH	P08025380	**52,00**
		L 100	80	TANYA TH - TERRY TH	P08025390	**77,00**
	Bend 90° with inspection	L 16 x H 16	80	TANYA TH - TERRY TH	P08025910	**77,00**
	Bend 90°	L 16 x H 16	80	TANYA TH - TERRY TH	P08025400	**72,00**
	Bend 45°	L 12 x H 12	80	TANYA TH - TERRY TH	P08025410	**52,00**
	T-fitting w/RH and LH side inspection port	L 14 x H 18	80	TANYA TH - TERRY TH	P08027250	**95,00**
	T-fitting w/support	L 12 x H 17-22	80	TANYA TH - TERRY TH	P08027230	**120,00**
	T-fitting w/support	L 12 x H 17-22	80-100	TANYA TH - TERRY TH	P08027240	**120,00**
	T-fitting w/inspection port	L 18 x H 14	80	TANYA TH - TERRY TH	P08025430	**82,00**
	Flue ring	-	80	TANYA TH - TERRY TH	P08025490	**26,00**
	Wall connector	-	80	TANYA TH - TERRY TH	P08025550	**26,00**
	Pipe with inspection	L 25	100	TAMARA TH	P08025980	**36,00**
	Pipe	L 25	100	TAMARA TH	P08025920	**31,00**
	Pipe	L 50	100	TAMARA TH	P08025930	**57,00**
	Pipe	L 100	100	TAMARA TH	P08025940	**77,00**
	Bend 90° with inspection	L 18 x H 18	100	TAMARA TH	P08025990	**77,00**
	Bend 90°	L 18 x H 18	100	TAMARA TH	P08025950	**72,00**
	Bend 45°	L 12 x H 12	100	TAMARA TH	P08025960	**52,00**
	T-fitting w/inspection port	L 20 x H 16	100	TAMARA TH	P08025970	**77,00**
	Flue ring	-	100	TAMARA TH	P08025480	**36,00**
	Wall connector	-	100	TAMARA TH	P08025560	**31,00**

Prices are considered to be without sales taxes. "SUPERIOR" - Gruppo Piazzetta S.p.A. reserves the right to make any technical and aesthetic changes without prior notice.Document reserved for the Gruppo Piazzetta S.p.A. sales organisation.

Technical drawings

TAMARA TH

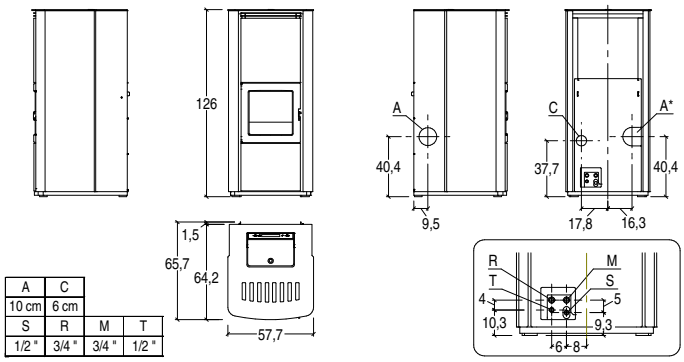

A	C		
10 cm	6 cm		
S	R	M	T
1/2 "	3/4 "	3/4 "	1/2 "

TANYA TH

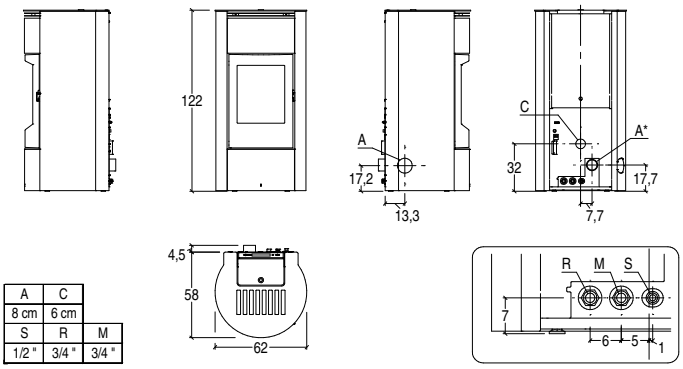

A	C	
8 cm	6 cm	
S	R	M
1/2 "	3/4 "	3/4 "

TERRY TH

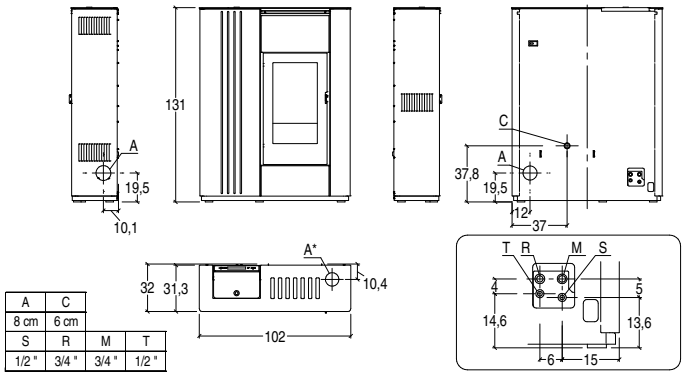

A	C		
8 cm	6 cm		
S	R	M	T
1/2 "	3/4 "	3/4 "	1/2 "

All drawing dimensions in cm.

KEY: **A** Flue outlet; **C** Combustion air inlet; **S** Safety valve discharge; **R** System return; **M** System delivery; **T** System filling.

Prices are considered to be without sales taxes. “SUPERIOR” - Gruppo Piazzetta S.p.A. reserves the right to make any technical and aesthetic changes without prior notice.Document reserved for the Gruppo Piazzetta S.p.A. sales organisation.

PELLET-BURNING VENTILATED THERMO INSERTS

SCP 14 TH 42

Accessories 43

PELLET-BURNING VENTILATED THERMO INSERTS

SCP 14 TH

THERMO

FORCED VENTILATION

	MODEL	CODE	EURO
Insert Thermo Ventilated	SCP 14 TH WITH LOADING TRAY	SI4809810-0	**4.165,00**
	SCP 14 TH WITH ADJUSTABLE LOADING	SI4809820-0	**4.210,00**
	SCP 14 TH WITH FRONT LOADING	SI4809830-0	**4.545,00**
	SCP 14 TH WITH LOADING RIGHT OR LEFT	SI4809840-0	**4.410,00**

TECHNICAL DATA

Model		SCP 14 TH
Type		YP250-01
Energy efficiency class		A+
Nominal heat output (min - max)	kW	5,0 - 16,9
Heat output to water (min - max)	kW	3,9 - 14,0
Heat output to environment (min - max)	kW	1,1 - 2,9
Thermal efficiency (min - max)	%	91,1 - 90,1
Nominal consumption (min - max)	kg/h	1,1 - 3,9
Nominal voltage	V-Hz	230 - 50
Standard flue outlet Ø	cm	10
Hopper capacity	kg	22
Dimensions W x D x H	cm	78 x 61 x 74
Weight	kg	180

A+ ENERGY EFFIC. CLASS

Essential kits

PELLET-LOADING TRAYS

	ITEM
	Pellet-loading front tray

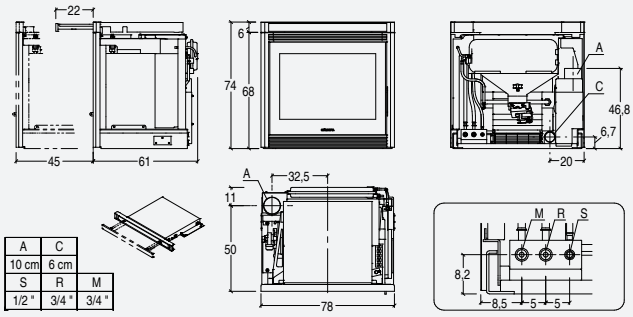

A	C
10 cm	6 cm

S	R	M
1/2 "	3/4 "	3/4 "

PELLET TANKS

	ITEM
	Kit containing tank with adjustable loading, total capacity approx. 23 kg
	Kit containing tank with front loading, total capacity approx. 42 kg
	Kit containing tank with right-hand or left-hand loading to be positioned on the chimney, total capacity approx. 52 kg

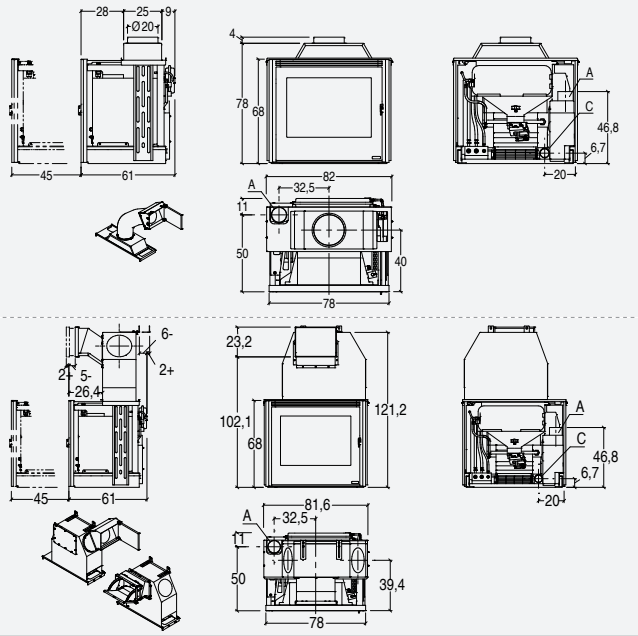

Prices are considered to be without sales taxes. "SUPERIOR" - Gruppo Piazzetta S.p.A. reserves the right to make any technical and aesthetic changes without prior notice.Document reserved for the Gruppo Piazzetta S.p.A. sales organisation.

PELLET-BURNING VENTILATED THERMO INSERTS

Accessories on request

REMOTE MANAGEMENT

	ITEM	INTERNAL COMPATIBLE	CODE	EURO
	WI-FI module for management with the Piazzetta App (in order to install it, you need to have the pellet tray or additional pellet hopper)	SCP 14 TH	N08013023C	**285,00**
	GPRS module for management with text messages (in order to install it, you need to have the pellet tray or additional pellet hopper)	SCP 14 TH	NI08013005-0	**437,00**

COMPENSATION KIT AND CLOSING FRAMES

	ITEM	INTERNAL COMPATIBLE	CODE	EURO
	Closing frame kit (perforated metal profile) compatible with pellet-loading tray	SCP 14 TH	P08060710C	**115,00**
	Closing frame kit (perforated metal profile) not compatible with pellet-loading tray	SCP 14 TH	P08016550C	**115,00**

FEET KIT

	ITEM	INTERNAL COMPATIBLE	CODE	EURO
	Fixed rise kit: W 72 x D 45 x H 38 cm	SCP 14 TH	N08019002C	**165,00**

COMBUSTION AIR KIT

	ITEM	INTERNAL COMPATIBLE	CODE	EURO
	Combustion air kit	SCP 14 TH	N08010020C	**120,00**
	Ø 6 cm flex pipe for external combustion air kit connection	SCP 14 TH	N08011017	**15,00** per linear metre

EDGE PROFILES

	ITEM	INTERNAL COMPATIBLE	CODE	EURO
	Edge profile	SCP 14 TH	N08014008C	**295,00**
	Edge profile (Front tray kit for pellet loading, compatible)	SCP 14 TH	N08014009C	**295,00**

PELLET BOILERS

Data charts 46

CPS 20 48
CPS 26 49
CPS 26 ACS 50
CPS 32 51
CPS 32 ACS 52
ADDITIONAL HOPPER 53
PNEUMATIC PELLET-LOADING SYSTEM . . 54

Accessories 55

Pellet boilers

Data charts

Technical data	Units	CPS 20	CPS 26
Model		CPS 20	CPS 26
Type		SP282-02	SP292-02
Energy efficiency class		A+	A+
Heat output to water (min - max)	kW	5,8 - 19,6	7,5 - 25,8
Thermal efficiency (min - max)	%	88,9 - 91,1	88,3 - 93,0
Nominal consumption (min - max)	kg/h	1,3 - 4,4	1,7 - 5,7
Nominal voltage	V-Hz	230 - 50	230 - 50
Standard flue outlet Ø	cm	10	10
Hopper capacity	kg	58	72
Boiler capacity	l	22	35
Sanitary hot water production with ΔT = 30 °C	l/min	-	-
Maximum operating pressure	bar	1,5	1,5
3 bar relief valve	Ø	1/2"	1/2"
System delivery	Ø	3/4"	3/4"
System return	Ø	3/4"	3/4"
System filling	Ø	1/2"	1/2"
Weight [2]	kg	205	254
Dimensions W x D x H	cm	56 x 64 x 139	70 x 64 x 139
Heating		hot water production	hot water production
Stove		steel	steel
Boiler		steel	steel
Firebox		steel	steel
Brazier		steel	steel
Conveyor		steel	steel
Heat exchanger cleaning system		rotating scrapers	rotating scrapers
Expansion tank		standard	standard
Sanitary Hot Water		-	-
Standard circulator		high efficiency	high efficiency
Safety valve and relief valve		standard	standard
Reversible external door		steel, insulated	steel, insulated
Standard flue outlet position		LH rear	LH rear
Optional flue outlet		LH side	LH side
Function control		function control with LCD	function control with LCD
Power levels		16 automatic power levels based on set water temperature	16 automatic power levels based on set water temperature
Programmable timer-thermostat		6 daily time frames	6 daily time frames
Brazier cleaning intervals		yes	yes
Pellet level sensor		yes with warning message on the display	yes with warning message on the display
Double pressure switch		standard	standard
Electronically controlled combustion air		with motorised valve	with motorised valve
Energy Saving		yes	yes
Eco Function		yes	yes
Anti-freeze Function		yes	yes
Summer/Winter function		yes	yes
Electronically-controlled anti-condensation valve		standard	standard
Probe for managing storage tank		standard	standard
Probe for managing SHW storage tank		standard	standard
Can be connected to an external thermostat		yes	yes
Aux control		yes	yes
Ash vacuum cleaner		standard	standard
Flue gas chamber ash pan		removable	removable
Auxiliary hopper		optional	optional
Display with timer-thermostat and cable remote controls		optional	optional
Combustion air kit		optional	optional
Piazzetta App for Wi-Fi management		optional	optional
Remote stove SMS text management		optional	optional
Page		48	49

[1] Please refer to the instruction manual for details regarding the type of installation.
[2] Dry weight.
Data obtained under laboratory conditions using pellets with heat production rated at greater than or equal to 4.9 kWh/kg. Consumption varies according to the dimensions and type of pellets used.

Prices are considered to be without sales taxes. "SUPERIOR" - Gruppo Piazzetta S.p.A. reserves the right to make any technical and aesthetic changes without prior notice.Document reserved for the Gruppo Piazzetta S.p.A. sales organisation.

Pellet boilers

Data charts

CPS 26 ACS	CPS 32	CPS 32 ACS
CPS 26 ACS	CPS 32	CPS 32 ACS
SP292-01	SP420-02	SP420-01
A+	A+	A+
7,5 - 25,8	9,2 - 32,0	9,2 - 32,0
88,3 - 93,0	90,5 - 92,5	90,5 - 92,5
1,7 - 5,7	2,0 - 7,0	2,0 - 7,0
230 - 50	230 - 50	230 - 50
10	10	10
72	72	72
35	35	35
12,8	-	15
1,5	1,5	1,5
1/2"	1/2"	1/2"
3/4"	3/4"	3/4"
3/4"	3/4"	3/4"
1/2"	1/2"	1/2"
255	270	271
70 x 64 x 139	70 x 64 x 139	70 x 64 x 139
hot water production and sanitary hot water production	hot water production	hot water production and sanitary hot water production
steel	steel	steel
steel	steel	steel
steel	steel	steel
steel	steel	steel
steel	steel	steel
rotating scrapers	rotating scrapers	rotating scrapers
standard	standard	standard
standard	-	standard
high efficiency	high efficiency	high efficiency
standard	standard	standard
steel, insulated	steel, insulated	steel, insulated
LH rear	LH rear	LH rear
LH side	LH side	LH side
function control with LCD	function control with LCD	function control with LCD
16 automatic power levels based on set water temperature	16 automatic power levels based on set water temperature	16 automatic power levels based on set water temperature
6 daily time frames	6 daily time frames	6 daily time frames
yes	yes	yes
yes with warning message on the display	yes with warning message on the display	yes with warning message on the display
standard	standard	standard
with motorised valve	with motorised valve	with motorised valve
yes	yes	yes
yes	yes	yes
yes	yes	yes
yes	yes	yes
standard	standard	standard
standard	standard	standard
standard	standard	standard
yes	yes	yes
yes	yes	yes
standard	standard	standard
removable	removable	removable
optional	optional	optional
optional	optional	optional
optional	optional	optional
optional	optional	optional
optional	optional	optional
50	51	52

[1] Please refer to the instruction manual for details regarding the type of installation.
[2] Dry weight.
Data obtained under laboratory conditions using pellets with heat production rated at greater than or equal to 4.9 kWh/kg. Consumption varies according to the dimensions and type of pellets used.

CPS 20

THERMO

Data chart
on page 46.

	CODE	EURO
CPS 20 PELLET BOILER	S70200000C	4.085,00

ACCESSORIES ON REQUEST	CODE	EURO
Additional hopper kit inclusive of auger	S08030780C	2.050,00
Side left-hand flue kit	P08060830C	62,00
Display with thermostat timer for remote control	N08013008C	155,00
Wi-Fi module for control with Superior App	N08013013C	245,00
Module GPRS for SMS module management	N08013005C	402,00
Combustion air kit	N08010028C	45,00
Flexible pipe Ø 6 cm for combustion air	N08011017	15,00 per linear metre
Accessories for connecting and managing the water supply system	See section from page 57	
Accessories - Certified pipes and bends for connecting the flue	See section from page 55	

CHARACTERISTICS

OPTIONALS

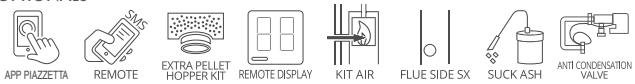

GENERAL CHARACTERISTICS

- Heating: hot water production
- Monobloc unit: steel
- Boiler: steel
- Fire pit: steel
- Brazier: steel
- Conveyor: steel
- Cleaning the exchanger: rotating scrapers
- Expansion tank: standard
- Standard circulator: high efficiency
- Safety valve and relief valve: standard
- Reversible external door: steel, insulated
- Standard flue outlet position: rear left
- Optional flue outlet: left side
- Function control: with LCD
- Power adjustment: 16 automatic power levels based on water temperature set
- Programmable timer-thermostat: 6 daily time period settings
- Regular brazier cleaning: yes
- Pellet level sensor: yes, with display notification
- Double pressure switch: standard
- Electronically controlled combustion air: with motorised valve
- Energy saving: yes
- Eco function: yes
- Anti-freeze function: yes
- Summer/Winter function: yes
- Probe for managing storage tank: standard
- Probe for managing DHW storage tank: standard
- Connectable to an external thermostat: yes
- Aux control: yes
- Flue gas chamber ash pan: removable
- Electronically controlled anti-condensation valve: optional
- Ash vacuum cleaner: optional
- Auxiliary hopper: optional
- Display with timer-thermostat and cable remote controls: optional
- Combustion air kit: optional
- Piazzetta App for Wi-Fi management: optional
- Module for SMS management: optional

TECHNICAL DATA

Model		CPS 20
Type		SP282-02
Energy efficiency class		A+
Heat output to water (min - max)	kW	5,8 - 19,6
Thermal efficiency (min - max)	%	88,9 - 91,1
Nominal consumption (min - max)	kg/h	1,3 - 4,4
Nominal voltage	V-Hz	230 - 50
Standard flue outlet Ø	cm	10
Hopper capacity	kg	58
Boiler capacity	l	22
Maximum operating pressure	bar	1,5
3 bar relief valve	Ø	1/2"
System delivery	Ø	3/4"
System return	Ø	3/4"
System filling	Ø	1/2"
Weight [2]	kg	205
Dimensions W x D x H	cm	56 x 64 x 139

[2] Dry weight.

A+ ENERGY EFFIC. CLASS

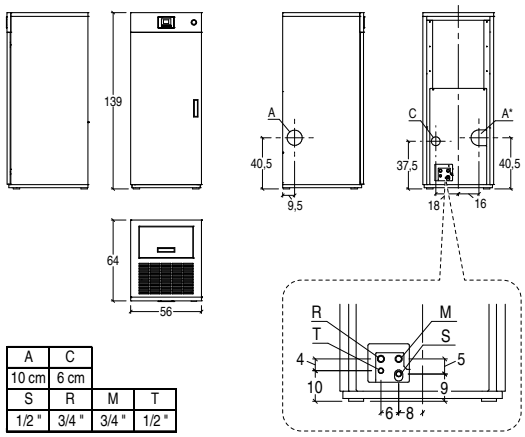

A	C
10 cm	6 cm

S	R	M	T
1/2 "	3/4 "	3/4 "	1/2 "

A Flue outlet; **C** Combustion air inlet; **S** Safety valve discharge;
R System return; **M** System delivery; **T** System filling.
All drawing dimensions in cm.

Prices are considered to be without sales taxes. "SUPERIOR" - Gruppo Piazzetta S.p.A. reserves the right to make any technical and aesthetic changes without prior notice.Document reserved for the Gruppo Piazzetta S.p.A. sales organisation.

PELLET BOILERS

CPS 26

THERMO

Data chart
on page 46.

	CODE	EURO
PELLET BOILER CPS 26	S70260000C	**4.935,00**

ACCESSORIES ON REQUEST	CODE	EURO
Additional hopper kit inclusive of auger	S08030780C	**2.050,00**
Side left-hand flue kit	P08060830C	**62,00**
Display with thermostat timer for remote control	N08013008C	**155,00**
Module Wi-Fi for the App Superior	N08013013C	**245,00**
Module GPRS for SMS module management	N08013005C	**402,00**
Combustion air kit	N08010028C	**45,00**
Flexible pipe Ø 6 cm for combustion air	N08011017	**15,00** per linear metre
Accessories for connecting and managing the water supply system	See section from page 57	
Accessories - Certified pipes and bends for connecting the flue	See section from page 55	

CHARACTERISTICS

OPTIONALS

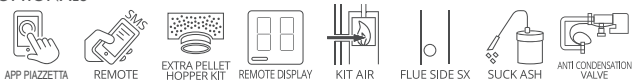

GENERAL CHARACTERISTICS

- Heating: hot water production
- Monobloc unit: steel
- Boiler: steel
- Fire pit: steel
- Brazier: steel
- Conveyor: steel
- Cleaning the exchanger: rotating scrapers
- Expansion tank: standard
- Standard circulator: high efficiency
- Safety valve and relief valve: standard
- Reversible external door: steel, insulated
- Standard flue outlet position: rear left
- Optional flue outlet: left side
- Function control: with LCD
- Power adjustment: 16 automatic power levels based on water temperature set
- Programmable timer-thermostat: 6 daily time period settings
- Regular brazier cleaning: yes
- Pellet level sensor: yes, with display notification
- Double pressure switch: standard
- Energy saving: yes
- Eco function: yes
- Anti-freeze function: yes
- Summer/Winter function: yes
- Probe for managing storage tank: standard
- Probe for managing DHW storage tank: standard
- Connectable to an external thermostat: yes
- Aux control: yes
- Flue gas chamber ash pan: removable
- Electronically controlled anti-condensation valve: optional
- Ash vacuum cleaner: optional
- Auxiliary hopper: optional
- Display with timer-thermostat and cable remote controls: optional
- Combustion air kit: optional
- Piazzetta App for Wi-Fi management: optional
- Module for SMS management: optional

TECHNICAL DATA

Model		CPS 26
Type		SP292-02
Energy efficiency class		A+
Heat output to water (min - max)	kW	7,5 - 25,8
Thermal efficiency (min - max)	%	88,3 - 93,0
Nominal consumption (min - max)	kg/h	1,7 - 5,7
Nominal voltage	V-Hz	230 - 50
Standard flue outlet Ø	cm	10
Hopper capacity	kg	72
Boiler capacity	l	35
Maximum operating pressure	bar	1,5
3 bar relief valve	Ø	1/2"
System delivery	Ø	3/4"
System return	Ø	3/4"
System filling	Ø	1/2"
Weight [2]	kg	254
Dimensions W x D x H	cm	70 x 64 x 139

[2] Dry weight.

A+ ENERGY EFFIC. CLASS

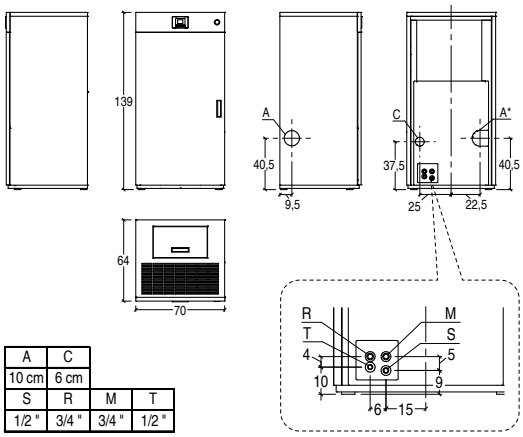

A	C
10 cm	6 cm

S	R	M	T
1/2 "	3/4 "	3/4 "	1/2 "

A Flue outlet; **C** Combustion air inlet; **S** Safety valve discharge;
R System return; **M** System delivery; **T** System filling.
All drawing dimensions in cm.

Prices are considered to be without sales taxes. "SUPERIOR" - Gruppo Piazzetta S.p.A. reserves the right to make any technical and aesthetic changes without prior notice.Document reserved for the Gruppo Piazzetta S.p.A. sales organisation.

CPS 26 ACS

THERMO

ACS

Data chart
on page 47.

	CODE	EURO
CPS 26 PELLET BOILER	S70260100C	**5.345,00**

ACCESSORIES ON REQUEST	CODE	EURO
Additional hopper kit inclusive of auger	S08030780C	**2.050,00**
Side left-hand flue kit	P08060830C	**62,00**
Display with thermostat timer for remote control	N08013008C	**155,00**
Module Wi-Fi for the App Superior	N08013013C	**245,00**
Module GPRS for SMS module management	N08013005C	**402,00**
Combustion air kit	N08010028C	**45,00**
Flexible pipe Ø 6 cm for combustion air	N08011017	**15,00** per linear metre
Accessories for connecting and managing the water supply system	See section from page 57	
Accessories - Certified pipes and bends for connecting the flue	See section from page 55	

CHARACTERISTICS

OPTIONALS

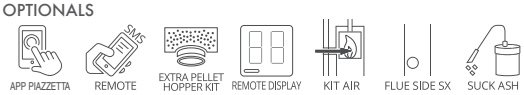

GENERAL CHARACTERISTICS

- Heating: hot water production
- Monobloc unit: steel
- Boiler: steel
- Fire pit: steel
- Brazier: steel
- Conveyor: steel
- Cleaning the exchanger: rotating scrapers
- Expansion tank: standard
- Standard circulator: high efficiency
- Safety valve and relief valve: standard
- Reversible external door: steel, insulated
- Standard flue outlet position: rear left
- Optional flue outlet: left side
- Function control: with LCD
- Power adjustment: 16 automatic power levels based on water temperature set
- Programmable timer-thermostat: 6 daily time period settings
- Regular brazier cleaning: yes
- Pellet level sensor: yes, with display notification
- Double pressure switch: standard
- Electronically controlled anti-condensation valve: standard
- Energy saving: yes
- Eco function: yes
- Anti-freeze function: yes
- Summer/Winter function: yes
- Probe for managing storage tank: standard
- Probe for managing DHW storage tank: standard
- Connectable to an external thermostat: yes
- Aux control: yes
- Flue gas chamber ash pan: removable
- Ash vacuum cleaner: optional
- Auxiliary hopper: optional
- Display with timer-thermostat and cable remote controls: optional
- Combustion air kit: optional
- Piazzetta App for Wi-Fi management: optional
- Module for SMS management: optional

TECHNICAL DATA

Model		CPS 26 ACS
Type		SP292-01
Energy efficiency class		A+
Heat output to water (min - max)	kW	7,5 - 25,8
Thermal efficiency (min - max)	%	88,3 - 93,0
Nominal consumption (min - max)	kg/h	1,7 - 5,7
Nominal voltage	V-Hz	230 - 50
Standard flue outlet Ø	cm	10
Hopper capacity	kg	72
Boiler capacity	l	35
Sanitary hot water production with ΔT = 30 °C	l/min	12,8
Maximum operating pressure	bar	1,5
3 bar relief valve	Ø	1/2"
System delivery	Ø	3/4"
System return	Ø	3/4"
System filling	Ø	1/2"
Weight [2]	kg	255
Dimensions W x D x H	cm	70 x 64 x 139

[2] Dry weight.

A+ ENERGY EFFIC. CLASS

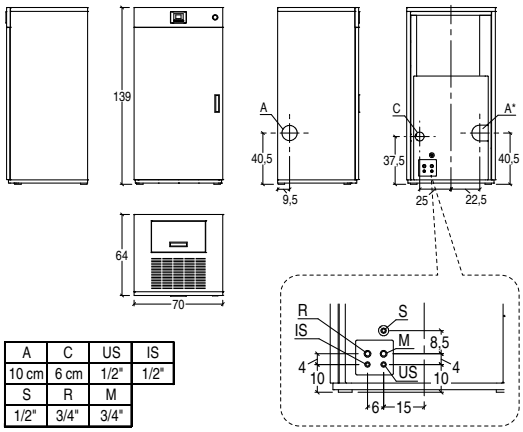

A	C	US	IS
10 cm	6 cm	1/2"	1/2"
S	R	M	
1/2"	3/4"	3/4"	

A Flue outlet; **C** Combustion air inlet; **S** Safety valve discharge;
R System return; **M** System delivery; **T** System filling.
All drawing dimensions in cm.

Prices are considered to be without sales taxes. "SUPERIOR" - Gruppo Piazzetta S.p.A. reserves the right to make any technical and aesthetic changes without prior notice.Document reserved for the Gruppo Piazzetta S.p.A. sales organisation.

PELLET BOILERS

CPS 32

THERMO

Data chart
on page 47.

	CODE	EURO
PELLET BOILER CPS 32	S70320000C	**5.130,00**

ACCESSORIES ON REQUEST	CODE	EURO
Additional hopper kit inclusive of auger	S08030780C	**2.050,00**
Side left-hand flue kit	P08060830C	**62,00**
Display with thermostat timer for remote control	N08013008C	**155,00**
Module Wi-Fi for the App Superior	N08013013C	**245,00**
Module GPRS for SMS module management	N08013005C	**402,00**
Combustion air kit	N08010011C	**30,00**
Flexible pipe Ø 6 cm for combustion air	N08011017	**15,00** per linear metre
Accessories for connecting and managing the water supply system	See section from page 57	
Accessories - Certified pipes and bends for connecting the flue	See section from page 55	

CHARACTERISTICS

OPTIONALS

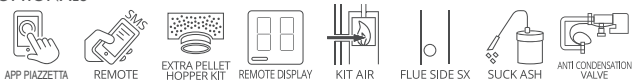

GENERAL CHARACTERISTICS

- Heating: hot water production
- Monobloc unit: steel
- Boiler: steel
- Fire pit: steel
- Brazier: steel
- Conveyor: steel
- Cleaning the exchanger: rotating scrapers
- Expansion tank: standard
- Standard circulator: high efficiency
- Safety valve and relief valve: standard
- Reversible external door: steel, insulated
- Standard flue outlet position: rear left
- Optional flue outlet: left side
- Function control: with LCD
- Power adjustment: 16 automatic power levels based on water temperature set
- Programmable timer-thermostat: 6 daily time period settings
- Regular brazier cleaning: yes
- Pellet level sensor: yes, with display notification
- Double pressure switch: standard
- Energy saving: yes
- Eco function: yes
- Anti-freeze function: yes
- Summer/Winter function: yes
- Probe for managing storage tank: standard
- Probe for managing DHW storage tank: standard
- Connectable to an external thermostat: yes
- Aux control: yes
- Flue gas chamber ash pan: removable
- Electronically controlled anti-condensation valve: optional
- Ash vacuum cleaner: optional
- Auxiliary hopper: optional
- Display with timer-thermostat and cable remote controls: optional
- Combustion air kit: optional
- Piazzetta App for Wi-Fi management: optional
- Module for SMS management: optional

TECHNICAL DATA

Model		CPS 32
Type		SP420-02
Energy efficiency class		A+
Heat output to water (min - max)	kW	9,2 - 32,0
Thermal efficiency (min - max)	%	90,5 - 92,5
Nominal consumption (min - max)	kg/h	2,0 - 7,0
Nominal voltage	V-Hz	230 - 50
Standard flue outlet Ø	cm	10
Hopper capacity	kg	72
Boiler capacity	l	35
Maximum operating pressure	bar	1,5
3 bar relief valve	Ø	1/2"
System delivery	Ø	3/4"
System return	Ø	3/4"
System filling	Ø	1/2"
Weight [2]	kg	270
Dimensions W x D x H	cm	70 x 64 x 139

[2] Dry weight.

A+ ENERGY EFFIC. CLASS

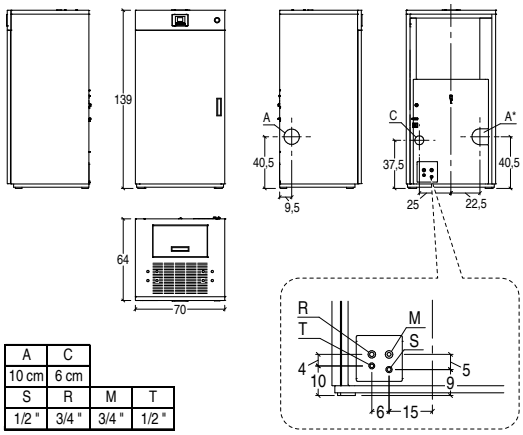

A	C
10 cm	6 cm

S	R	M	T
1/2 "	3/4 "	3/4 "	1/2 "

A Flue outlet; **C** Combustion air inlet; **S** Safety valve discharge;
R System return; **M** System delivery; **T** System filling.
All drawing dimensions in cm.

Prices are considered to be without sales taxes. "SUPERIOR" - Gruppo Piazzetta S.p.A. reserves the right to make any technical and aesthetic changes without prior notice.Document reserved for the Gruppo Piazzetta S.p.A. sales organisation.

CPS 32 ACS

THERMO

ACS

Data chart
on page 47.

	CODE	EURO
PELLET BOILER CPS 32 ACS	S70320100C	**5.715,00**

ACCESSORIES ON REQUEST	CODE	EURO
Additional hopper kit inclusive of auger	S08030780C	**2.050,00**
Side left-hand flue kit	P08060830C	**62,00**
Display with thermostat timer for remote control	N08013008C	**155,00**
Module Wi-Fi for the App Superior	N08013013C	**245,00**
Module GPRS for SMS module management	N08013005C	**402,00**
Combustion air kit	N08010011C	**30,00**
Flexible pipe Ø 6 cm for combustion air	N08011017	**15,00** per linear metre
Accessories for connecting and managing the water supply system	See section from page 57	
Accessories - Certified pipes and bends for connecting the flue	See section from page 55	

CHARACTERISTICS

OPTIONALS

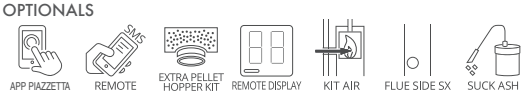

GENERAL CHARACTERISTICS

- Heating: hot water production
- Monobloc unit: steel
- Boiler: steel
- Fire pit: steel
- Brazier: steel
- Conveyor: steel
- Cleaning the exchanger: rotating scrapers
- Expansion tank: standard
- Standard circulator: high efficiency
- Safety valve and relief valve: standard
- Reversible external door: steel, insulated
- Standard flue outlet position: rear left
- Optional flue outlet: left side
- Function control: with LCD
- Power adjustment: 16 automatic power levels based on water temperature set
- Programmable timer-thermostat: 6 daily time period settings
- Regular brazier cleaning: yes
- Pellet level sensor: yes, with display notification
- Double pressure switch: standard
- Electronically controlled anti-condensation valve: standard
- Energy saving: yes
- Eco function: yes
- Anti-freeze function: yes
- Summer/Winter function: yes
- Probe for managing storage tank: standard
- Probe for managing DHW storage tank: standard
- Connectable to an external thermostat: yes
- Aux control: yes
- Flue gas chamber ash pan: removable
- Ash vacuum cleaner: optional
- Auxiliary hopper: optional
- Display with timer-thermostat and cable remote controls: optional
- Combustion air kit: optional
- Piazzetta App for Wi-Fi management: optional
- Module for SMS management: optional

TECHNICAL DATA

Model		CPS 32 ACS
Type		SP420-01
Energy efficiency class		A+
Heat output to water (min - max)	kW	9,2 - 32,0
Thermal efficiency (min - max)	%	90,5 - 92,5
Nominal consumption (min - max)	kg/h	2,0 - 7,0
Nominal voltage	V-Hz	230 - 50
Standard flue outlet Ø	cm	10
Hopper capacity	kg	72
Boiler capacity	l	35
Sanitary hot water production with ΔT = 30 °C	l/min	15
Maximum operating pressure	bar	1,5
3 bar relief valve	Ø	1/2"
System delivery	Ø	3/4"
System return	Ø	3/4"
System filling	Ø	1/2"
Weight [2]	kg	271
Dimensions W x D x H	cm	70 x 64 x 139

[2] Dry weight.

A+ ENERGY EFFIC. CLASS

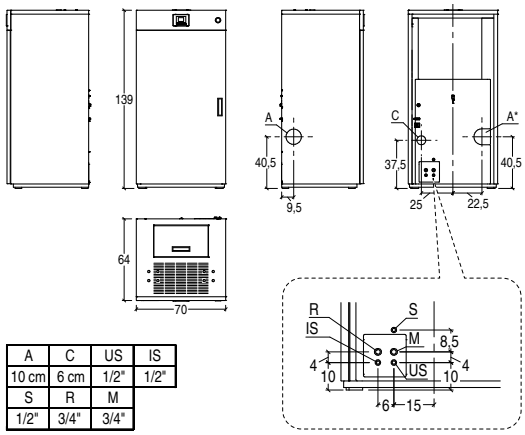

A	C	US	IS
10 cm	6 cm	1/2"	1/2"
S	R	M	
1/2"	3/4"	3/4"	

A Flue outlet; **C** Combustion air inlet; **S** Safety valve discharge;
R System return; **M** System delivery; **T** System filling.
All drawing dimensions in cm.

Prices are considered to be without sales taxes. "SUPERIOR" - Gruppo Piazzetta S.p.A. reserves the right to make any technical and aesthetic changes without prior notice.Document reserved for the Gruppo Piazzetta S.p.A. sales organisation.

ADDITIONAL HOPPER

	CODE	EURO
Additional hopper for pellet boilers	S08030780C	**2.050,00**

ACCESSORIES ON REQUEST	CODE	EURO
Kit with casters for hopper	P08060870C	**200,00**

GENERAL CHARACTERISTICS

Structure	steel
Reversible [4]	yes
Pellet level sensor	standard
Automatic loading system	standard
Auger	standard
Motor	standard
Accessories for installation	standard
Casters for shifting	optional
Levelling feet	standard

[4] If the optional discharge kit is installed, the hopper can only be installed on the right-hand side of the boiler.

TECHNICAL DATA

Box dimensions L x D x H	cm	67 x 61 x 207
Capacity	kg	190
Supply pipe dimensions Ø	cm	9
Nominal voltage	V	220
Absorbed power	W	250

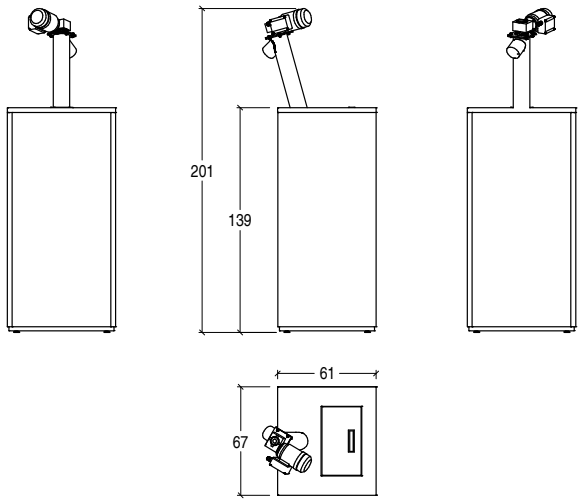

All drawing dimensions in cm.

Prices are considered to be without sales taxes. "SUPERIOR" - Gruppo Piazzetta S.p.A. reserves the right to make any technical and aesthetic changes without prior notice.Document reserved for the Gruppo Piazzetta S.p.A. sales organisation.

PNEUMATIC PELLET-LOADING SYSTEM

	CODE	EURO
Pneumatic pellet loading system [1]	P08061400C	**2.745,00**

[1] System for fully loading storage warehouse, dispenser measuring device, extraction unit and suction unit.

ACCESSORIES ON REQUEST	CODE	EURO
MIDI elevation unit H=20	P08060880C	**170,00**
MIDI elevation unit H=30	P08060890C	**185,00**
MIDI elevation unit H=60	P08060900C	**245,00**
Cover	P08060910C	**125,00**
Filtering system	P08060920C	**230,00**

Pneumatic pellet-loading system

STORAGE WAREHOUSE

Capacity	l	660
Capacity	kg	460
Max. load	kg	1400
Weight	kg	50,7

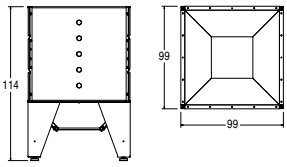

EXTRACTION UNIT

Power supply	V	230
Frequency	Hz	50
Protection rating	IP	40
Power	W	15
Consumption	A	0,14
No. revs	rpm	12
Nominal torque	Nm	5

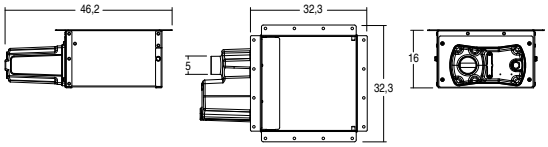

FLEXIBLE TUBE

Length	m	20
Diameter	mm	50

DISPENSER MEASURING DEVICE

Capacity	l	5,2
Protection rating	IP	44
Weight	kg	1,65

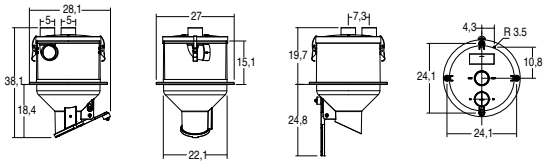

SUCTION UNIT

Fuel loading	Ø mm	50
Air outlet	Ø mm	50
Protection rating	IP	20
Power supply	V ac	230
Frequency	Hz	50/60
Motor power	kW	1,35
Consumption	A	5,6
Max. air flow	m3/h	216
Mesh filter for inspection	-	yes
MAX measuring device capacity	l	5,2
Air outlet silencer	-	yes
Weight	kg	8,40
Noise level	dB(A)	< 70

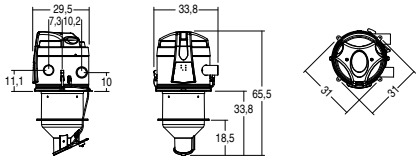

Accessories on request

ELEVATION UNIT

Models		Model 600	Model 300	Model 200
Height A	mm	600	300	200
Depth B	mm	990	990	990
Length C	mm	990	990	990
Weight	Kg	21	11,4	8,2
Capacity	l	540	270	180
Capacity	Kg	380	190	125

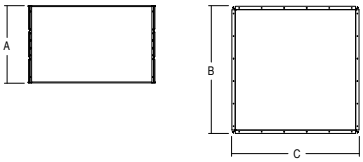

FABRIC COVER

Weight	Kg	1,8

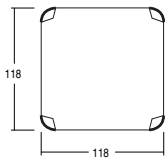

FILTERING SYSTEM

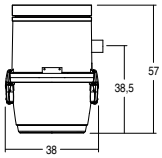

Prices are considered to be without sales taxes. "SUPERIOR" - Gruppo Piazzetta S.p.A. reserves the right to make any technical and aesthetic changes without prior notice.Document reserved for the Gruppo Piazzetta S.p.A. sales organisation.

Accessories - Certified pipes and bends for connecting the flue

REMOTE MANAGEMENT

	ITEM	COMPATIBLE MODELS	CODE	EURO
	Display with thermostat timer for remote control	All models	N08013008C	**155,00**
	Wi-Fi module for control through Superior App inclusive of serial cable and power supply [1]	All models	N08013013C	**245,00**
	Module GPRS for SMS module management complete with power supply	All models	N08013005C	**402,00**

[1] Compatible with all models produced or updated starting from 2013.

COMBUSTION AIR KIT AND ACCESSORIES

	ITEM	COMPATIBLE MODELS	CODE	EURO
	Combustion air kit	CPS 32 - CPS 32 ACS	N08010011C	**30,00**
	Combustion air kit	CPS 20 CPS 26 - CPS 26 ACS	N08010028C	**45,00**
	Flexible pipe Ø 6 cm for combustion air	All models	N08011017	**15,00** per linear metre

OPTIONAL FLUE OUTLET KIT

	ITEM	COMPATIBLE MODELS	CODE	EURO
	Side left-hand flue kit	All models	P08060830C	**62,00**

CLEANING AND MAINTENANCE ACCESSORIES

	ITEM	COMPATIBLE MODELS	CODE	EURO
	Cleaning rod	All models	P08061290C	**40,00**

Accessories - Certified pipes and bends for connecting the flue

PIPES - BENDS - CONNECTORS FOR PELLET BOILERS

Aluminium coated steel connecting flue pipes single wall, 2 mm thick, V2 corrosion resistance class, EN 1856-2 compliant

	ITEM	DIMENSIONS IN CM	Ø MM	COMPATIBLE MODELS	CODE	EURO
	Pipe with inspection	L 25	100	All models	P08025980	**36,00**
	Pipe	L 25	100	All models	P08025920	**31,00**
		L 50	100	All models	P08025930	**57,00**
		L 100	100	All models	P08025940	**77,00**
	Bend 90° with inspection	L 18 x H 18	100	All models	P08025990	**77,00**
	Bend 90°	L 18 x H 18	100	All models	P08025950	**72,00**
	Bend 45°	L 12 x H 12	100	All models	P08025960	**52,00**
	T-fitting w/inspection port	L 20 x H 16	100	All models	P08025970	**77,00**
	Flue ring	-	100	All models	P08025480	**36,00**
	Wall connector	-	100	All models	P08025560	**31,00**

Prices are considered to be without sales taxes. “SUPERIOR” - Gruppo Piazzetta S.p.A. reserves the right to make any technical and aesthetic changes without prior notice.Document reserved for the Gruppo Piazzetta S.p.A. sales organisation.

Thermo Stoves - TH INSERTS - BOILERS

Accessories for connecting and managing the water supply system

PLATE SEPARATOR KIT - WITH 1 CIRCULATOR

	ITEM	COMPATIBLE MODELS	CODE	EURO
	Multifunctional hydraulic separator installable on the wall for dividing the flow rates and heads between the circuits. Inclusive of deaerator for separating and evacuating the air in the system, system safety valve and shut-off valves.	TH Stoves - TH Inserts - Boilers	P08061000C	**620,00**

• Box dimensions L x D x H	cm	45 x 16 x 50
• Maximum operating temperature	°C	95
• Circuit maximum operating pressure	bar	3
• Secondary circuit circulator	mwc	6,5
• Connections	Ø	3/4" M
• Plate heat exchanger power output	kW	35
• Nominal voltage	V	230
• Absorbed power	W	60
• Circulator		1
• Plate heat exchanger		yes

HYDRAULIC SEPARATOR

	ITEM	COMPATIBLE MODELS	CODE	EURO
	Multifunctional hydraulic separator for dividing the flow rates and heads between the circuits. Inclusive of deaerator for separating and evacuating the air present in the circuit, sludge remover for eliminating impurities in the lower zone of the body and magnetic cartridge for blocking ferromagnetic impurities. Equipped with a manual relief valve and drain tap.	TH Stoves - TH Inserts - Boilers	P08061050C	**495,00**

• Dimensions W x H	cm	22,6 x 52,5
• Plumbing connections	Ø	1" with F fittings
• Threaded body		Painted steel
• Air relief valve body		Brass
• Insulation	mm	12
• Maximum operating pressure	bar	10
• Fluid temperature range	°C	0-110
• Maximum glycol percentage	%	30

3-WAY SWITCH VALVE

	ITEM	COMPATIBLE MODELS	CODE	EURO
	Electronically controlled 3-way switch/mixing valve, for combined control of the heating system and of the SHW boiler. Connectable to the electronic board through the multi-pole connector. Removable head for quick and easy maintenance. Manual operation for system emptying and filling, or lack of power supply.	THERMO STOVES - BOILERS	P08061010C	**115,00**

• Valve body		Brass
• Return springs / Shutter shaft		Steel / Stainless steel
• Opening temperature settable values		yes
• Maximum nominal pressure		PN10
• Activation		Electric - manual
• Plumbing connections	Ø	3/4 " M
• Nominal voltage	V	220 - 240
• Nominal frequency	Hz	50
• Absorbed power	W	4

THERMOSTATIC MIXING VALVE FOR DHW

	ITEM	COMPATIBLE MODELS	CODE	EURO
	Thermostatic mixing valve inclusive of fittings for DHW control. Keeps the temperature of the mixed water constant. Anti-scald system for blocking the flow of hot water in the absence of cold water.	All DHW boiler models and combined puffers	P08061040C	**70,00**

• Dimensions W x D x H	cm	14,1 x 4,1 x 14,7
• Plumbing connections	Ø	3/4" with M fittings
• Valve body		Brass
• Shutter		Brass
• Springs		Stainless steel
• Activation		Manual
• Adjustment range	°C	30 - 60
• Maximum operating pressure	bar	5
• Kvs	m3/h	1,60
• Max. inlet temperature	°C	120

Prices are considered to be without sales taxes. "SUPERIOR" - Gruppo Piazzetta S.p.A. reserves the right to make any technical and aesthetic changes without prior notice.Document reserved for the Gruppo Piazzetta S.p.A. sales organisation.

Thermo Stoves - TH INSERTS - BOILERS

Accessories for connecting and managing the water supply system

ELECTRONICALLY-CONTROLLED ANTI-CONDENSATION VALVE

	ITEM	COMPATIBLE MODELS	CODE	EURO
	Electronically controlled anti-condensation valve. Connectable to the electronic board through the multi-pole connector.	TH Stoves - TH Inserts - Boilers	N08019013C	**195,00**

• Valve body		Brass
• Return springs / Shutter shaft		Steel / Stainless steel
• Opening temperature settable values		Electronically controlled with pre-set parameters
• Maximum nominal pressure		PN10
• Activation		Electric
• Hydraulic connections / Quick-connect fitting	Ø	1 " - 3/4 " / 18 mm
• Nominal voltage	V	230
• Nominal frequency	Hz	50
• Absorbed power	W	1,8

ANTI-CONDENSATION VALVE 63°C

	ITEM	COMPATIBLE MODELS	CODE	EURO
	Anti-condensation valve 63°C to install on the system delivery. Recommended for connecting heat generators to puffers.	TH Stoves - TH Inserts - Boilers	P08061030C	**100,00**

• Dimensions W x D x H	cm	8,8 x 64
• Plumbing connections	Ø	1" F
• Valve body		Brass
• Cartridge		Die-cast aluminium
• Sensing bulb opening temperature	°C	63
• Complete hysteresis by-pass closing	°C	10
• Fluid temperature range	°C	5-110
• Maximum nominal pressure	bar	10

CONNECTION TO HYDRAULIC CIRCUIT

	ITEM	COMPATIBLE MODELS	CODE	EURO
	Kit for connection to the hydraulic system comprising manometer, ball valves and fittings	TAMARTH Stove - TANYA TH	N08019012C	**140,00**
	Kit for connection to the hydraulic system comprising ball valves and fittings	TERRY TH Stove - TH Inserts	N08019014C	**45,00**

[1] If the hydraulic connection kit is installed, a 1" fitting is used instead of a 3/4" fitting for connection to the system.

PUFFER, VERSION 300

	ITEM	COMPATIBLE MODELS	CODE	EURO
	Technical puffer with carbon steel exchanger. 5 cm-thick rigid expanded polyurethane insulation.	TH stoves < 15kW	P08061310C	**755,00**

• Dimensions W x H	cm	Ø 65 x 134
• Weight	kg	65
• Net volume of technical water	lt	279
• Technical water storage tank temperature	°C	99
• Technical water storage tank max. pressure	bar	3

Prices are considered to be without sales taxes. "SUPERIOR" - Gruppo Piazzetta S.p.A. reserves the right to make any technical and aesthetic changes without prior notice.Document reserved for the Gruppo Piazzetta S.p.A. sales organisation.

Thermo Stoves - TH INSERTS - BOILERS

Accessories for connecting and managing the water supply system

VERSION 500 PUFFER WITH DOUBLE HEAT EXCHANGER

	ITEM	COMPATIBLE MODELS	CODE	EURO
	Technical puffer with double carbon steel exchanger. Double serpentine exchanger. 5 cm-thick rigid expanded polyurethane insulation.	All models	P08061080C	**1.445,00**

• Dimensions W x H	cm	Ø 75 x 162
• Weight	kg	180
• Net volume	lt	478
• Upper / lower heat exchanger surface	m²	1,3 / 1,9
• Storage tank max. pressure	bar	3
• Storage tank max. temperature	°C	99
• Heat exchanger max. pressure	bar	12
• Technical water storage tank temperature	°C	110

VERSION 600 PUFFER WITH DOUBLE HEAT EXCHANGER

	ITEM	COMPATIBLE MODELS	CODE	EURO
	Technical puffer with double carbon steel exchanger. Double serpentine exchanger. 5 cm-thick rigid expanded polyurethane insulation.	All models	P08061320C	**1.620,00**

• Dimensions W x H	cm	Ø 75 x 187
• Weight	kg	150
• Net volume of technical water	lt	560
• Upper / lower heat exchanger surface	m²	1,3 / 2,1
• Heat exchangers max. pressure	bar	12
• Heat exchanger max. temperature	°C	110
• Technical water storage tank max. pressure	bar	3
• Technical water storage tank temperature	°C	99

VERSION 800 PUFFER WITH DOUBLE EXCHANGER

	ITEM	COMPATIBLE MODELS	CODE	EURO
	Technical puffer with double carbon steel exchanger. Double serpentine exchanger. 5 cm-thick rigid expanded polyurethane insulation.	All models	P08061330C	**2.000,00**

• Dimensions W x H	cm	Ø 94 x 184
• Weight	kg	170
• Net volume of technical water	lt	805
• Upper / lower heat exchanger surface	m²	1,8 / 2,5
• Heat exchangers max. pressure	bar	12
• Heat exchanger max. temperature	°C	110
• Technical water storage tank max. pressure	bar	3
• Technical water storage tank temperature	°C	99

Prices are considered to be without sales taxes. "SUPERIOR" - Gruppo Piazzetta S.p.A. reserves the right to make any technical and aesthetic changes without prior notice.Document reserved for the Gruppo Piazzetta S.p.A. sales organisation.

Thermo Stoves - TH INSERTS - BOILERS

Accessories for connecting and managing the water supply system

VERSION 1000 PUFFER WITH DOUBLE HEAT EXCHANGER

	ITEM	COMPATIBLE MODELS	CODE	EURO
	Technical puffer with double carbon steel exchanger. Double serpentine exchanger. 5 cm-thick rigid expanded polyurethane insulation.	All models	P08061090C	**2.060,00**

• Dimensions W x H	cm	Ø 99 x 213
• Weight	kg	220
• Net volume	lt	946
• Upper / lower heat exchanger surface	m²	2,5 / 3,1
• Storage tank max. pressure	bar	3
• Storage tank max. temperature	°C	99
• Heat exchanger max. pressure	bar	12
• Heat exchanger max. temperature	°C	110

VERSION 600 TANK-IN-TANK PUFFER

	ITEM	COMPATIBLE MODELS	CODE	EURO
	Technical puffer and integrated puffer for DHW. Double serpentine exchanger. Standard magnesium anode. 5 cm-thick rigid expanded polyurethane insulation.	All models	P08061100C	**2.005,00**

• Dimensions W x H	cm	Ø 75 x 192
• Weight	kg	180
• Net volume of technical water	lt	375
• Net volume of domestic hot water	lt	146
• Upper / lower heat exchanger surface	m²	1,9 / 2,8
• Upper / lower heat exchanger volume	lt	12 / 20
• Heat exchangers max. pressure	bar	12
• Technical water storage tank temperature	°C	110
• Technical water storage tank max. pressure	bar	3
• Technical water storage tank temperature	°C	99
• SHW storage tank max. pressure	bar	6
• SHW storage tank max. temperature	°C	95
• Heat exchanger max. temperature	°C	110

VERSION 1000 TANK-IN-TANK PUFFER

	ITEM	COMPATIBLE MODELS	CODE	EURO
	Technical puffer and integrated puffer for DHW. Double serpentine exchanger. Standard magnesium anode. 5 cm-thick rigid expanded polyurethane insulation.	All models	P08061110C	**2.935,00**

• Dimensions W x H	cm	Ø 95 x 218
• Weight	kg	270
• Net volume of technical water	lt	661
• Net volume of domestic hot water	lt	226
• Upper / lower heat exchanger surface	m²	3,1 / 3,7
• Upper / lower heat exchanger volume	lt	20 / 24
• Heat exchangers max. pressure	bar	12
• Technical water storage tank temperature	°C	110
• Technical water storage tank max. pressure	bar	3
• Technical water storage tank temperature	°C	99
• SHW storage tank max. pressure	bar	6
• SHW storage tank max. temperature	°C	95
• Heat exchanger max. temperature	°C	110

Prices are considered to be without sales taxes. “SUPERIOR” - Gruppo Piazzetta S.p.A. reserves the right to make any technical and aesthetic changes without prior notice.Document reserved for the Gruppo Piazzetta S.p.A. sales organisation.

Thermo Stoves - TH INSERTS - BOILERS

Accessories for connecting and managing the water supply system

VERSION 600 PUFFER PIPE IN TANK

	ITEM	COMPATIBLE MODELS	CODE	EURO
	Technical puffer and integrated stainless stainless steel puffer for DHW. Double serpentine exchanger. 5 cm-thick rigid expanded polyurethane insulation.	All models	P08061340C	**2.595,00**

• Dimensions W x H	cm	Ø 75 x 187
• Weight	kg	155
• Net volume of technical water	lt	500
• Upper / lower heat exchanger surface	m²	1,3 / 2,1
• Upper / lower heat exchanger volume	lt	8 / 13
• Heat exchangers max. pressure	bar	12
• Heat exchanger max. temperature	°C	110
• Technical water storage tank max. pressure	bar	3
• Technical water storage tank temperature	°C	99
• DHW exchanger surface	m²	5,3
• DHW exchanger volume	lt	31

VERSION 800 PUFFER PIPE IN TANK

	ITEM	COMPATIBLE MODELS	CODE	EURO
	Technical puffer and integrated stainless stainless steel puffer for DHW. Double serpentine exchanger. 5 cm-thick rigid expanded polyurethane insulation.	All models	P08061350C	**3.355,00**

• Dimensions W x H	cm	Ø 95 x 184
• Weight	kg	205
• Net volume of technical water	lt	738
• Upper / lower heat exchanger surface	m²	1,8 / 2,5
• Upper / lower heat exchanger volume	lt	11,8 / 16,3
• Heat exchangers max. pressure	bar	12
• Heat exchanger max. temperature	°C	110
• Technical water storage tank max. pressure	bar	3
• Technical water storage tank temperature	°C	99
• DHW exchanger surface	m²	5,8
• DHW exchanger volume	lt	33,4

VERSION 1000 PUFFER PIPE IN TANK

	ITEM	COMPATIBLE MODELS	CODE	EURO
	Technical puffer and integrated stainless stainless steel puffer for DHW. Double serpentine exchanger. 5 cm-thick rigid expanded polyurethane insulation.	All models	P08061360C	**3.785,00**

• Dimensions W x H	cm	Ø 95 x 213
• Weight	kg	238
• Net volume of technical water	lt	855
• Upper / lower heat exchanger surface	m²	2,5 / 3,1
• Upper / lower heat exchanger volume	lt	16,3 / 20,7
• Heat exchangers max. pressure	bar	12
• Heat exchanger max. temperature	°C	110
• Technical water storage tank max. pressure	bar	3
• Technical water storage tank temperature	°C	99
• DHW exchanger surface	m²	7,8
• DHW exchanger volume	lt	45,5

Prices are considered to be without sales taxes. "SUPERIOR" - Gruppo Piazzetta S.p.A. reserves the right to make any technical and aesthetic changes without prior notice.Document reserved for the Gruppo Piazzetta S.p.A. sales organisation.

Thermo Stoves - TH INSERTS - BOILERS

Accessories for connecting and managing the water supply system

VERSION 150 DOMESTIC WATER BOILER

	ITEM	COMPATIBLE MODELS	CODE	EURO
	Boiler with single heat exchanger for the production and storage of domestic hot water (DHW). Standard magnesium anode. 5 cm-thick rigid expanded polyurethane insulation.	All models	P08061060C	**795,00**

- Dimensions W x H — cm — Ø 50 x 141,4
- Weight — kg — 49
- Net volume — l — 147
- No. of heat exchangers — - — 1
- Heat exchangers' surface — m² — 0,60
- Storage tank max. pressure — bar — 10
- Storage tank max. temperature — °C — 90
- Heat exchanger max. pressure — bar — 12
- Heat exchanger max. temperature — °C — 110

VERSION 300 DOMESTIC WATER BOILER

	ITEM	COMPATIBLE MODELS	CODE	EURO
	Boiler with double serpentine heat exchanger for the production and storage of domestic hot water (DHW). Standard magnesium anode. 5 cm-thick rigid expanded polyurethane insulation.	All models	P08061070C	**1.075,00**

- Dimensions W x H — cm — Ø 65 x 148,6
- Weight — kg — 83
- Net volume — l — 291
- No. of heat exchangers — - — 2
- Upper / lower heat exchanger surface — m² — 0,7 / 1,2
- Storage tank max. pressure — bar — 10
- Storage tank max. temperature — °C — 90
- Heat exchanger max. pressure — bar — 12
- Heat exchanger max. temperature — °C — 110

Prices are considered to be without sales taxes. “SUPERIOR” - Gruppo Piazzetta S.p.A. reserves the right to make any technical and aesthetic changes without prior notice.Document reserved for the Gruppo Piazzetta S.p.A. sales organisation.

Thermo Stoves - TH INSERTS - BOILERS

Accessories for connecting and managing the water supply system

VERSION 18 SHW EXPANSION TANK

	ITEM	COMPATIBLE MODELS	CODE	EURO
	Expansion tank for domestic water systems	All Tank-in-Tank Puffer models and SHW Boilers	P08061140C	**35,00**

• Dimensions W x H	cm	Ø 26 x 38
• Capacity	lt	18
• Plumbing connections	Ø	M 3/4"
• Diaphragm		EPDM
• Pre-filling pressure	bar	2,50
• Maximum operating pressure	bar	8
• Operating temperature	°C	-10÷100
• External finish		Grigio

VERSION 12 EXPANSION TANK FOR HEATING SYSTEM

	ITEM	COMPATIBLE MODELS	CODE	EURO
	Expansion tank for heating systems	All models	P08061120C	**30,00**

• Dimensions W x H	cm	Ø 28,5 x 32,5
• Capacity	lt	12
• Plumbing connections	Ø	M 3/4"
• Diaphragm		SBR
• Pre-filling pressure	bar	1,50
• Maximum operating pressure	bar	4
• Operating temperature	°C	-10÷100
• External finish		Red

EXPANSION TANK FOR HEATING SYSTEM VERSION 24

	ITEM	COMPATIBLE MODELS	CODE	EURO
	Expansion tank for heating systems	All models	P08061130C	**40,00**

• Dimensions W x H	cm	Ø 32,5 x 42
• Capacity	lt	24
• Plumbing connections	Ø	M 3/4"
• Diaphragm		SBR
• Pre-filling pressure	bar	1,50
• Maximum operating pressure	bar	4
• Operating temperature	°C	-10÷100
• External finish		Red

Prices are considered to be without sales taxes. "SUPERIOR" - Gruppo Piazzetta S.p.A. reserves the right to make any technical and aesthetic changes without prior notice.Document reserved for the Gruppo Piazzetta S.p.A. sales organisation.

WOOD-BURNING STOVES

Data charts 66

MADDALENA WITH OVEN 71
MALIKA WITH OVEN 71
MANUELA 72
MARELLA 72
MEDEA 73
MICAELA 73
MILENA WITH OVEN 74
MILVA 74
MIRIAM 75
MORENA WITH OVEN 75
SANDRA 76
SARA WITH OVEN 76
SAVINA WITH OVEN 77
SIBILLA 77
SILVIA 78
SIMONA WITH OVEN 78
STEFANIA 79
VALERIA 79
VIOLA 80

Accessories 81

Technical drawings 84

Wood-burning stoves

Data charts

Technical data	Units	MADDALENA WITH OVEN	MALIKA WITH OVEN	MANUELA
Natural convection		**yes**	**yes**	**yes**
Oven		**yes**	**yes**	**-**
Model		MADDALENA	MALIKA	MANUELA
Type		SL380-01	SL380-01	SL370-01
Energy efficiency class		A	A	A+
Dimensions W x D x H	cm	47 x 41 x 132	50 x 43 x 134,5	47 x 41 x 90
Nominal heat output	kW	6,2	6,2	6,6
Thermal efficiency	%	80,0	80,0	81,0
Nominal consumption	kg/h	1,8	1,8	1,9
Standard flue outlet Ø	cm	12	12	12
Stainless steel oven W x D x H	cm	26 x 25 x 31,5	26 x 25 x 31,5	-
Stove weight	kg	160	147	120
Room heating capacity *	m³	105 - 180	105 - 180	110 - 190
Cladding		majolica	painted steel	majolica
Bench in majolica		-	-	-
Top		cast iron	cast iron	cast iron
Stove		steel	steel	steel
Firebox		cast iron	cast iron	cast iron
Baffle plate		cast iron	cast iron	Skamolex
Brazier		cast iron	cast iron	cast iron
Removable ash drawer		yes	yes	yes
Door		cast iron with automatic closure	cast iron with automatic closure	cast iron with automatic closure
Door handle		chrome-plated with anti-burn spring	steel with nickel-plated finish	chrome-plated with anti-burn spring
Standard flue outlet position		top	top	top
Ceramic glass		resistant up to 750°C	resistant up to 750°C	resistant up to 750°C
Glass cleaning system		continuous air flow	continuous air flow	continuous air flow
Primary and secondary air		adjustable	adjustable	adjustable
Installation **		wall - corner	wall - corner	wall - corner
Page		71	71	72

* Calculated on the basis of nominal heat output, referring to rooms with a heating requirement between 0.060 and 0.035 kW per m³. We recommend always contacting a heating engineer for the final calculations.

** Please refer to the instruction manual for details regarding the type of installation.

Prices are considered to be without sales taxes. "SUPERIOR" - Gruppo Piazzetta S.p.A. reserves the right to make any technical and aesthetic changes without prior notice.Document reserved for the Gruppo Piazzetta S.p.A. sales organisation.

Wood-burning stoves

Data charts

MARELLA	MEDEA	MICAELA	MILENA WITH OVEN	MILVA	MIRIAM
yes	**yes**	**yes**	**yes**	**yes**	**yes**
-	**-**	**-**	**yes**	**-**	**-**
MARELLA	MEDEA	MICAELA	MILENA	MILVA	MIRIAM
SL370-01	SL370-01	SL370-01	SL380-01	SL370-01	SL370-01
A+	A+	A+	A	A+	A+
53,5 x 46 x 95,5	50 x 43 x 92	47 x 41 x 90	47 x 41 x 132	53,5 x 45,5 x 90	47 x 41 x 90
6,6	6,6	6,6	6,2	6,6	6,6
81,0	81,0	81,0	80,0	81,0	81,0
1,9	1,9	1,9	1,8	1,9	1,9
12	12	12	12	12	12
-	-	-	26 x 25 x 31,5	-	-
160	110	96	160	147	120
110 - 190	110 - 190	110 - 190	105 - 180	110 - 190	110 - 190
majolica	painted steel	painted steel	majolica	majolica	majolica
-	-	-	-	-	-
cast iron and majolica	cast iron	cast iron	cast iron	cast iron and majolica	cast iron
steel	steel	steel	steel	steel	steel
cast iron	cast iron	cast iron	cast iron	cast iron	cast iron
Skamolex	Skamolex	Skamolex	cast iron	Skamolex	Skamolex
cast iron	cast iron	cast iron	cast iron	cast iron	cast iron
yes	yes	yes	yes	yes	yes
cast iron with automatic closure	cast iron with automatic closure	cast iron with automatic closure	cast iron with automatic closure	cast iron with automatic closure	cast iron with automatic closure
chrome-plated with anti-burn spring	steel with nickel-plated finish	chrome-plated with anti-burn spring	chrome-plated with anti-burn spring	chrome-plated with anti-burn spring	chrome-plated with anti-burn spring
top	top	top	top	top	top
resistant up to 750°C	resistant up to 750°C	resistant up to 750°C	resistant up to 750°C	resistant up to 750°C	resistant up to 750°C
continuous air flow	continuous air flow	continuous air flow	continuous air flow	continuous air flow	continuous air flow
adjustable	adjustable	adjustable	adjustable	adjustable	adjustable
wall - corner	wall - corner	wall - corner	wall - corner	wall - corner	wall - corner
72	73	73	74	74	75

Prices are considered to be without sales taxes. "SUPERIOR" - Gruppo Piazzetta S.p.A. reserves the right to make any technical and aesthetic changes without prior notice.Document reserved for the Gruppo Piazzetta S.p.A. sales organisation.

Wood-burning stoves

Data charts

Technical data	Units	MORENA WITH OVEN	SANDRA	SARA WITH OVEN
Natural convection		**yes**	**yes**	**yes**
Oven		**yes**	**-**	**yes**
Model		MORENA	SANDRA	SARA
Type		SL380-01	S55	S55F
Energy efficiency class		A	A	A
Dimensions W x D x H	cm	53,5 x 45,5 x 133	57 x 49 x 100	57 x 49 x 142
Nominal heat output	kW	6,2	8,0	8,0
Thermal efficiency	%	80,0	78,2	80,3
Nominal consumption	kg/h	1,8	2,5	2,4
Standard flue outlet Ø	cm	12	15	15
Stainless steel oven W x D x H	cm	26 x 25 x 31,5	-	32 x 35 x 31,5
Stove weight	kg	195	140	225
Room heating capacity *	m³	105 - 180	135 - 230	135 - 230
Cladding		majolica	painted steel	majolica
Bench in majolica		-	-	-
Top		cast iron and majolica	cast iron	cast iron
Stove		steel	steel	steel
Firebox		cast iron	cast iron	cast iron
Baffle plate		cast iron	cast iron	cast iron
Brazier		cast iron	cast iron	cast iron
Removable ash drawer		yes	yes	yes
Door		cast iron with automatic closure	cast iron with automatic closure	cast iron with automatic closure
Door handle		chrome-plated with anti-burn spring	chrome-plated with anti-burn spring	chrome-plated with anti-burn spring
Standard flue outlet position		top	top	top
Ceramic glass		resistant up to 750°C	resistant up to 750°C	resistant up to 750°C
Glass cleaning system		continuous air flow	continuous air flow	continuous air flow
Primary and secondary air		adjustable	adjustable	adjustable
Installation **		wall - corner	wall - corner	wall - corner
Page		75	76	76

* Calculated on the basis of nominal heat output, referring to rooms with a heating requirement between 0.060 and 0.035 kW per m³. We recommend always contacting a heating engineer for the final calculations.

** Please refer to the instruction manual for details regarding the type of installation.

Prices are considered to be without sales taxes. "SUPERIOR" - Gruppo Piazzetta S.p.A. reserves the right to make any technical and aesthetic changes without prior notice.Document reserved for the Gruppo Piazzetta S.p.A. sales organisation.

Wood-burning stoves

Data charts

SAVINA WITH OVEN	**SIBILLA**	**SILVIA**	**SIMONA WITH OVEN**	**STEFANIA**
yes	**yes**	**yes**	**yes**	**yes**
yes	**-**	**-**	**yes**	**-**
SAVINA	SIBILLA	SILVIA	SIMONA	STEFANIA
S55F	S55	S55	S55F	S55
A	A	A	A	A
60 x 51 x 144,5	60 x 51 x 102	57 x 49 x 100	57 x 49 x 142	57 x 49 x 100
8,0	8,0	8,0	8,0	8,0
80,3	78,2	78,2	80,3	78,2
2,4	2,5	2,5	2,4	2,5
15	15	15	15	15
32 x 35 x 31,5	-	-	32 x 35 x 31,5	-
218	167	170	225	170
135 - 230	135 - 230	135 - 230	135 - 230	135 - 230
painted steel	painted steel	majolica	majolica	majolica
-	-	-	-	-
cast iron	cast iron	cast iron	cast iron	cast iron
steel	steel	steel	steel	steel
cast iron	cast iron	cast iron	cast iron	cast iron
cast iron	cast iron	cast iron	cast iron	cast iron
cast iron	cast iron	cast iron	cast iron	cast iron
yes	yes	yes	yes	yes
cast iron with automatic closure	cast iron with automatic closure	cast iron with automatic closure	cast iron with automatic closure	cast iron with automatic closure
steel with nickel-plated finish	steel with nickel-plated finish	chrome-plated with anti-burn spring	chrome-plated with anti-burn spring	chrome-plated with anti-burn spring
top	top	top	top	top
resistant up to 750°C	resistant up to 750°C	resistant up to 750°C	resistant up to 750°C	resistant up to 750°C
continuous air flow	continuous air flow	continuous air flow	continuous air flow	continuous air flow
adjustable	adjustable	adjustable	adjustable	adjustable
wall - corner	wall - corner	wall - corner	wall - corner	wall - corner
77	77	78	78	79

Prices are considered to be without sales taxes. "SUPERIOR" - Gruppo Piazzetta S.p.A. reserves the right to make any technical and aesthetic changes without prior notice.Document reserved for the Gruppo Piazzetta S.p.A. sales organisation.

Wood-burning stoves

Data charts

Technical data	Units	VALERIA	VIOLA
Natural convection		**yes**	**yes**
Oven		**-**	**-**
Model		VALERIA	VIOLA
Type		VANESSA	TYP10188
Energy efficiency class		A	A+
Dimensions W x D x H	cm	59.5 x 45.5 x 119.5	58 x 42 x 105
Nominal heat output	kW	7,0	8,0
Thermal efficiency	%	78.8	80,8
Nominal consumption	kg/h	2,4	2,6
Standard flue outlet Ø	cm	15	15
Stainless steel oven W x D x H	cm	-	-
Stove weight	kg	139.5	135
Room heating capacity *	m³	120 - 200	135 - 230
Cladding		majolica	majolica
Bench in majolica		-	-
Top		majolica	majolica
Stove		steel	steel
Firebox		Skamolex	Skamolex
Baffle plate		Skamolex	Skamolex
Brazier		cast iron - Skamolex	cast iron - Skamolex
Removable ash drawer		yes	yes
Door		cast iron with automatic closure	cast iron with automatic closure
Door handle		steel with nickel-plated finish	steel with nickel-plated finish
Standard flue outlet position		top - rear	top - rear
Ceramic glass		resistant up to 750°C	resistant up to 750°C
Glass cleaning system		continuous air flow	continuous air flow
Primary and secondary air		adjustable - pre-determined	adjustable - pre-determined
Installation **		wall - corner	wall - corner
Page		79	80

* Calculated on the basis of nominal heat output, referring to rooms with a heating requirement between 0.060 and 0.035 kW per m³. We recommend always contacting a heating engineer for the final calculations.

** Please refer to the instruction manual for details regarding the type of installation.

Prices are considered to be without sales taxes. “SUPERIOR” - Gruppo Piazzetta S.p.A. reserves the right to make any technical and aesthetic changes without prior notice.Document reserved for the Gruppo Piazzetta S.p.A. sales organisation.

MADDALENA WITH OVEN

NATURAL CONVECTION

Technical drawing on page 84.

Data chart on page 66.

	TOTAL PRICE
Total price including stove and majolica cladding	2.160,00

	MODEL/COLOUR	CODE	EURO
Cladding	BLU ANTICO	S06023870C	650,00
	BORDEAUX	S06023420C	650,00
	SALE PEPE	S06023070C	650,00
	TERRA ORIENTE	S06023550C	650,00
Firebox	S45F	S07014000C	1.510,00

ACCESSORIES ON REQUEST	CODE	EURO
Anti-condensation fitting	S08030660	57,00
Fitting ø 120/140 for inserting pipes Ø 140	S08030730	30,00
Fitting ø 120/140 for inserting anti-condensation pipes Ø 140	S08030670	62,00
Rectangular steel floor plate	P08024300	265,00
Round edged steel floor plate	P08024310	265,00

GENERAL CHARACTERISTICS

Heating	natural convection
Cladding	majolica
Top	cast iron
Stove	steel
Firebox	cast iron
Baffle plate	cast iron
Brazier	cast iron
Removable ash drawer	yes
Door	cast iron with automatic closure
Door handle	chrome-plated with anti-burn spring
Standard flue outlet position	top
Ceramic glass	resistant up to 750°C
Glass cleaning system	continuous air flow
Primary and secondary air	adjustable
Installation	wall - corner

TECHNICAL DATA

Model		MADDALENA
Type		SL380-01
Energy efficiency class		A
Room heating capacity	m³	105 - 180
Nominal heat output	kW	6,2
Nominal thermal efficiency	%	80,0
Nominal consumption	kg/h	1,8
Standard flue outlet Ø	cm	12
Dimensions W x D x H	cm	47 x 41 x 132
Stainless steel oven W x D x H	cm	26 x 25 x 31,5
Stove weight	kg	160

A ENERGY EFFIC. CLASS

MALIKA WITH OVEN

NATURAL CONVECTION

Technical drawing on page 84.

Data chart on page 70.

	TOTAL PRICE
Total price including stove and painted steel cladding	1.805,00

	MODEL/COLOUR	CODE	EURO
Firebox with cladding	BIANCO	S07021010C	1.805,00
	BORDEAUX	S07021020C	1.805,00
	BRUNITO	S07021040C	1.805,00
	GRIGIO	S07021030C	1.805,00

ACCESSORIES ON REQUEST	CODE	EURO
Anti-condensation fitting	S08030660	57,00
Fitting ø 120/140 for inserting pipes Ø 140	S08030730	30,00
Fitting ø 120/140 for inserting anti-condensation pipes Ø 140	S08030670	62,00
Rectangular steel floor plate	P08024300	265,00
Round edged steel floor plate	P08024310	265,00

GENERAL CHARACTERISTICS

Heating	natural convection
Cladding	painted steel
Top	cast iron
Stove	steel
Firebox	cast iron
Baffle plate	cast iron
Brazier	cast iron
Removable ash drawer	yes
Door	cast iron with automatic closure
Door handle	steel with nickel-plated finish
Standard flue outlet position	top
Ceramic glass	resistant up to 750°C
Glass cleaning system	continuous air flow
Primary and secondary air	adjustable
Installation	wall - corner

TECHNICAL DATA

Model		MALIKA
Type		SL380-01
Energy efficiency class		A
Room heating capacity	m³	105 - 180
Nominal heat output	kW	6,2
Nominal thermal efficiency	%	80,0
Nominal consumption	kg/h	1,8
Standard flue outlet Ø	cm	12
Dimensions W x D x H	cm	50 x 43 x 134,5
Stainless steel oven W x D x H	cm	26 x 25 x 31,5
Stove weight	kg	147

A ENERGY EFFIC. CLASS

Prices are considered to be without sales taxes. "SUPERIOR" - Gruppo Piazzetta S.p.A. reserves the right to make any technical and aesthetic changes without prior notice.Document reserved for the Gruppo Piazzetta S.p.A. sales organisation.

MANUELA

NATURAL CONVECTION

Technical drawing on page 84.

Data chart on page 66.

	TOTAL PRICE
Total price including stove and majolica cladding	1.520,00

	MODEL/COLOUR	CODE	EURO
Cladding	BLU ANTICO	S06021870C	475,00
	BORDEAUX	S06021420C	475,00
	SALE PEPE	S06021070C	475,00
	TERRA ORIENTE	S06021550C	475,00
Firebox	S45C	S07013000C	1.045,00

ACCESSORIES ON REQUEST	CODE	EURO
Anti-condensation fitting	S08030660	57,00
Fitting ø 120/140 for inserting pipes Ø 140	S08030730	30,00
Fitting ø 120/140 for inserting anti-condensation pipes Ø 140	S08030670	62,00
Rectangular steel floor plate	P08024300	265,00
Round edged steel floor plate	P08024310	265,00

GENERAL CHARACTERISTICS

Heating	natural convection
Cladding	majolica
Top	cast iron
Stove	steel
Firebox	cast iron
Baffle plate	Skamolex
Brazier	cast iron
Removable ash drawer	yes
Door	cast iron with automatic closure
Door handle	chrome-plated with anti-burn spring
Standard flue outlet position	top
Ceramic glass	resistant up to 750°C
Glass cleaning system	continuous air flow
Primary and secondary air	adjustable
Installation	wall - corner

TECHNICAL DATA

Model		MANUELA
Type		SL370-01
Energy efficiency class		A
Room heating capacity	m³	110 - 190
Nominal heat output	kW	6,6
Nominal thermal efficiency	%	81,0
Nominal consumption	kg/h	1,9
Standard flue outlet Ø	cm	12
Dimensions W x D x H	cm	47 x 41 x 90
Stove weight	kg	120

A ENERGY EFFIC. CLASS

MARELLA

NATURAL CONVECTION

Technical drawing on page 84.

Data chart on page 67.

	TOTAL PRICE
Total price including stove and majolica cladding	2.090,00

	MODEL/COLOUR	CODE	EURO
Cladding	BLU ANTICO	S06054870C	1.190,00
	BORDEAUX	S06054420C	1.190,00
	SALE PEPE	S06054070C	1.190,00
	TERRA ORIENTE	S06054550C	1.190,00
Firebox	S45	S07017000C	900,00

ACCESSORIES ON REQUEST	CODE	EURO
Anti-condensation fitting	S08030660	57,00
Fitting ø 120/140 for inserting pipes Ø 140	S08030730	30,00
Fitting ø 120/140 for inserting anti-condensation pipes Ø 140	S08030670	62,00
Rectangular steel floor plate	P08024300	265,00
Round edged steel floor plate	P08024310	265,00

GENERAL CHARACTERISTICS

Heating	natural convection
Cladding	majolica
Top	cast iron and majolica
Stove	steel
Firebox	cast iron
Baffle plate	Skamolex
Brazier	cast iron
Removable ash drawer	yes
Door	cast iron with automatic closure
Door handle	chrome-plated with anti-burn spring
Standard flue outlet position	top
Ceramic glass	resistant up to 750°C
Glass cleaning system	continuous air flow
Primary and secondary air	adjustable
Installation	wall - corner

TECHNICAL DATA

Model		MARELLA
Type		SL370-01
Energy efficiency class		A+
Room heating capacity	m³	110 - 190
Nominal heat output	kW	6,6
Nominal thermal efficiency	%	81,0
Nominal consumption	kg/h	1,9
Standard flue outlet Ø	cm	12
Dimensions W x D x H	cm	53,5 x 46 x 95,5
Stove weight	kg	160

A ENERGY EFFIC. CLASS

Prices are considered to be without sales taxes. "SUPERIOR" - Gruppo Piazzetta S.p.A. reserves the right to make any technical and aesthetic changes without prior notice.Document reserved for the Gruppo Piazzetta S.p.A. sales organisation.

MEDEA

NATURAL CONVECTION

Technical drawing on page 84.

Data chart on page 67.

Total price including stove and painted steel cladding	TOTAL PRICE 1.185,00

	MODEL/COLOUR	CODE	EURO
Firebox with cladding	BIANCO	S07020010C	1.185,00
	BORDEAUX	S07020020C	1.185,00
	BRUNITO	S07020040C	1.185,00
	GRIGIO	S07020030C	1.185,00

ACCESSORIES ON REQUEST	CODE	EURO
Anti-condensation fitting	S08030660	57,00
Fitting ø 120/140 for inserting pipes Ø 140	S08030730	30,00
Fitting ø 120/140 for inserting anti-condensation pipes Ø 140	S08030670	62,00
Rectangular steel floor plate	P08024300	265,00
Round edged steel floor plate	P08024310	265,00

GENERAL CHARACTERISTICS

Heating	natural convection
Cladding	painted steel
Top	cast iron
Stove	steel
Firebox	cast iron
Baffle plate	Skamolex
Brazier	cast iron
Removable ash drawer	yes
Door	cast iron with automatic closure
Door handle	steel with nickel-plated finish
Standard flue outlet position	top
Ceramic glass	resistant up to 750°C
Glass cleaning system	continuous air flow
Primary and secondary air	adjustable
Installation	wall - corner

TECHNICAL DATA

Model		MEDEA
Type		SL370-01
Energy efficiency class		A+
Room heating capacity	m³	110 - 190
Nominal heat output	kW	6,6
Nominal thermal efficiency	%	81,0
Nominal consumption	kg/h	1,9
Standard flue outlet Ø	cm	12
Dimensions W x D x H	cm	50 x 43 x 92
Stove weight	kg	110

A ENERGY EFFIC. CLASS

MICAELA

NATURAL CONVECTION

Technical drawing on page 84.

Data chart on page 67.

Total price including stove and painted steel cladding	TOTAL PRICE 1.135,00

	MODEL/COLOUR	CODE	EURO
Firebox with cladding	BIANCO	S07011050C	1.135,00
	BORDEAUX	S07011060C	1.135,00
	GRIGIO	S07011070C	1.135,00

ACCESSORIES ON REQUEST	CODE	EURO
Anti-condensation fitting	S08030660	57,00
Fitting ø 120/140 for inserting pipes Ø 140	S08030730	30,00
Fitting ø 120/140 for inserting anti-condensation pipes Ø 140	S08030670	62,00
Rectangular steel floor plate	P08024300	265,00
Round edged steel floor plate	P08024310	265,00

GENERAL CHARACTERISTICS

Heating	natural convection
Cladding	painted steel
Top	cast iron
Stove	steel
Firebox	cast iron
Baffle plate	Skamolex
Brazier	cast iron
Removable ash drawer	yes
Door	cast iron with automatic closure
Door handle	chrome-plated with anti-burn spring
Standard flue outlet position	top
Ceramic glass	resistant up to 750°C
Glass cleaning system	continuous air flow
Primary and secondary air	adjustable
Installation	wall - corner

TECHNICAL DATA

Model		MICAELA
Type		SL370-01
Energy efficiency class		A+
Room heating capacity	m³	110 - 190
Nominal heat output	kW	6,6
Nominal thermal efficiency	%	81,0
Nominal consumption	kg/h	1,9
Standard flue outlet Ø	cm	12
Dimensions W x D x H	cm	47 x 41 x 90
Stove weight	kg	96

A ENERGY EFFIC. CLASS

MILENA WITH OVEN

NATURAL CONVECTION

Technical drawing on page 85.

Data chart on page 67.

	TOTAL PRICE
Total price including stove and majolica cladding	2.160,00

	MODEL/COLOUR	CODE	EURO
Cladding	BLU ANTICO	S06027870C	650,00
	BORDEAUX	S06027420C	650,00
	SALE PEPE	S06027070C	650,00
	TERRA ORIENTE	S06027550C	650,00
Firebox	S45F	S07014000C	1.510,00

ACCESSORIES ON REQUEST	CODE	EURO
Anti-condensation fitting	S08030660	57,00
Fitting ø 120/140 for inserting pipes Ø 140	S08030730	30,00
Fitting ø 120/140 for inserting anti-condensation pipes Ø 140	S08030670	62,00
Rectangular steel floor plate	P08024300	265,00
Round edged steel floor plate	P08024310	265,00

GENERAL CHARACTERISTICS

Heating	natural convection
Cladding	majolica
Top	cast iron
Stove	steel
Firebox	cast iron
Baffle plate	cast iron
Brazier	cast iron
Removable ash drawer	yes
Door	cast iron with automatic closure
Door handle	chrome-plated with anti-burn spring
Standard flue outlet position	top
Ceramic glass	resistant up to 750°C
Glass cleaning system	continuous air flow
Primary and secondary air	adjustable
Installation	wall - corner

TECHNICAL DATA

Model		MILENA
Type		SL380-01
Energy efficiency class		A
Room heating capacity	m³	105 - 180
Nominal heat output	kW	6,2
Nominal thermal efficiency	%	80,0
Nominal consumption	kg/h	1,8
Standard flue outlet Ø	cm	12
Dimensions W x D x H	cm	47 x 41 x 132,5
Stainless steel oven W x D x H	cm	26 x 25 x 31,5
Stove weight	kg	160

A ENERGY EFFIC. CLASS

MILVA

NATURAL CONVECTION

Technical drawing on page 85.

Data chart on page 67.

	TOTAL PRICE
Total price including stove and majolica cladding	2.020,00

	MODEL/COLOUR	CODE	EURO
Cladding	BLU ANTICO	S06056870C	1.120,00
	BORDEAUX	S06056420C	1.120,00
	SALE PEPE	S06056070C	1.120,00
	TERRA ORIENTE	S06056550C	1.120,00
Firebox	S45	S07017000C	900,00

ACCESSORIES ON REQUEST	CODE	EURO
Anti-condensation fitting	S08030660	57,00
Fitting ø 120/140 for inserting pipes Ø 140	S08030730	30,00
Fitting ø 120/140 for inserting anti-condensation pipes Ø 140	S08030670	62,00
Rectangular steel floor plate	P08024300	265,00
Round edged steel floor plate	P08024310	265,00

GENERAL CHARACTERISTICS

Heating	natural convection
Cladding	majolica
Top	cast iron and majolica
Stove	steel
Firebox	cast iron
Baffle plate	Skamolex
Brazier	cast iron
Removable ash drawer	yes
Door	cast iron with automatic closure
Door handle	chrome-plated with anti-burn spring
Standard flue outlet position	top
Ceramic glass	resistant up to 750°C
Glass cleaning system	continuous air flow
Primary and secondary air	adjustable
Installation	wall - corner

TECHNICAL DATA

Model		MILVA
Type		SL370-01
Energy efficiency class		A+
Room heating capacity	m³	110 - 190
Nominal heat output	kW	6,6
Nominal thermal efficiency	%	81,0
Nominal consumption	kg/h	1,9
Standard flue outlet Ø	cm	12
Dimensions W x D x H	cm	53,5 x 45,5 x 90,5
Stove weight	kg	147

A ENERGY EFFIC. CLASS

Prices are considered to be without sales taxes. "SUPERIOR" - Gruppo Piazzetta S.p.A. reserves the right to make any technical and aesthetic changes without prior notice.Document reserved for the Gruppo Piazzetta S.p.A. sales organisation.

MIRIAM

NATURAL CONVECTION

Technical drawing on page 85.

Data chart on page 67.

	TOTAL PRICE
Total price including stove and majolica cladding	1.520,00

	MODEL/COLOUR	CODE	EURO
Cladding	BLU ANTICO	S06022870C	475,00
	BORDEAUX	S06022420C	475,00
	SALE PEPE	S06022070C	475,00
	TERRA ORIENTE	S06022550C	475,00
Firebox	S45C	S07013000C	1.045,00

ACCESSORIES ON REQUEST	CODE	EURO
Anti-condensation fitting	S08030660	57,00
Fitting ø 120/140 for inserting pipes Ø 140	S08030730	30,00
Fitting ø 120/140 for inserting anti-condensation pipes Ø 140	S08030670	62,00
Rectangular steel floor plate	P08024300	265,00
Round edged steel floor plate	P08024310	265,00

GENERAL CHARACTERISTICS

Heating	natural convection
Cladding	majolica
Top	cast iron
Stove	steel
Firebox	cast iron
Baffle plate	Skamolex
Brazier	cast iron
Removable ash drawer	yes
Door	cast iron with automatic closure
Door handle	chrome-plated with anti-burn spring
Standard flue outlet position	top
Ceramic glass	resistant up to 750°C
Glass cleaning system	continuous air flow
Primary and secondary air	adjustable
Installation	wall - corner

TECHNICAL DATA

Model		MIRIAM
Type		SL370-01
Energy efficiency class		A+
Room heating capacity	m³	110 - 190
Nominal heat output	kW	6,6
Nominal thermal efficiency	%	81,0
Nominal consumption	kg/h	1,9
Standard flue outlet Ø	cm	12
Dimensions W x D x H	cm	47 x 41 x 90
Stove weight	kg	120

A ENERGY EFFIC. CLASS

MORENA WITH OVEN

NATURAL CONVECTION

Technical drawing on page 85.

Data chart on page 68.

	TOTAL PRICE
Total price including stove and majolica cladding	2.615,00

	MODEL/COLOUR	CODE	EURO
Cladding	BLU ANTICO	S06057870C	1.230,00
	BORDEAUX	S06057420C	1.230,00
	SALE PEPE	S06057070C	1.230,00
	TERRA ORIENTE	S06057550C	1.230,00
Firebox	S45F	S07018000C	1.385,00

ACCESSORIES ON REQUEST	CODE	EURO
Anti-condensation fitting	S08030660	57,00
Fitting ø 120/140 for inserting pipes Ø 140	S08030730	30,00
Fitting ø 120/140 for inserting anti-condensation pipes Ø 140	S08030670	62,00
Rectangular steel floor plate	P08024300	265,00
Round edged steel floor plate	P08024310	265,00

GENERAL CHARACTERISTICS

Heating	natural convection
Cladding	majolica
Top	cast iron and majolica
Stove	steel
Firebox	cast iron
Baffle plate	cast iron
Brazier	cast iron
Removable ash drawer	yes
Door	cast iron with automatic closure
Door handle	chrome-plated with anti-burn spring
Standard flue outlet position	top
Ceramic glass	resistant up to 750°C
Glass cleaning system	continuous air flow
Primary and secondary air	adjustable
Installation	wall - corner

TECHNICAL DATA

Model		MORENA
Type		SL380-01
Energy efficiency class		A
Room heating capacity	m³	105 - 180
Nominal heat output	kW	6,2
Nominal thermal efficiency	%	80,0
Nominal consumption	kg/h	1,8
Standard flue outlet Ø	cm	12
Dimensions W x D x H	cm	53,5 x 45,5 x 133
Stainless steel oven W x D x H	cm	26 x 25 x 31,5
Stove weight	kg	195

A ENERGY EFFIC. CLASS

Prices are considered to be without sales taxes. "SUPERIOR" - Gruppo Piazzetta S.p.A. reserves the right to make any technical and aesthetic changes without prior notice.Document reserved for the Gruppo Piazzetta S.p.A. sales organisation.

SANDRA

NATURAL CONVECTION

Technical drawing on page 85.

Data chart on page 68.

	TOTAL PRICE
Total price including stove and painted steel cladding	1.555,00

	MODEL/COLOUR	CODE	EURO
Firebox with cladding	BIANCO	S07012050C	1.555,00
	BORDEAUX	S07012060C	1.555,00
	GRIGIO	S07012070C	1.555,00

ACCESSORIES ON REQUEST	CODE	EURO
Anti-condensation fitting	S08030680	57,00
Rectangular steel floor plate	P08024300	265,00
Round edged steel floor plate	P08024310	265,00

GENERAL CHARACTERISTICS

Heating	natural convection
Cladding	painted steel
Top	cast iron
Stove	steel
Firebox	cast iron
Baffle plate	cast iron
Brazier	cast iron
Removable ash drawer	yes
Door	cast iron with automatic closure
Door handle	chrome-plated with anti-burn spring
Standard flue outlet position	top
Ceramic glass	resistant up to 750°C
Glass cleaning system	continuous air flow
Primary and secondary air	adjustable
Installation	wall - corner

TECHNICAL DATA

Model		SANDRA
Type		S55
Energy efficiency class		A
Room heating capacity	m³	140 - 235
Nominal heat output	kW	8,0
Nominal thermal efficiency	%	78,2
Nominal consumption	kg/h	2,5
Standard flue outlet Ø	cm	15
Dimensions W x D x H	cm	57 x 49 x 100
Stove weight	kg	140

A ENERGY EFFIC. CLASS

SARA WITH OVEN

NATURAL CONVECTION

Technical drawing on page 85.

Data chart on page 68.

	TOTAL PRICE
Total price including stove and majolica cladding	2.950,00

	MODEL/COLOUR	CODE	EURO
Cladding	BLU ANTICO	S06026870C	745,00
	BORDEAUX	S06026420C	745,00
	SALE PEPE	S06026070C	745,00
	TERRA ORIENTE	S06026550C	745,00
Firebox	S55 F	S07016000C	2.205,00

ACCESSORIES ON REQUEST	CODE	EURO
Anti-condensation fitting Ø 150	S08030680	57,00
Anti-condensation fitting Ø 180	S08030690	52,00
Rectangular steel floor plate	P08024300	265,00
Round edged steel floor plate	P08024310	265,00

GENERAL CHARACTERISTICS

Heating	natural convection
Cladding	majolica
Top	cast iron
Stove	steel
Firebox	cast iron
Baffle plate	cast iron
Brazier	cast iron
Removable ash drawer	yes
Door	cast iron with automatic closure
Door handle	chrome-plated with anti-burn spring
Standard flue outlet position	top
Ceramic glass	resistant up to 750°C
Glass cleaning system	continuous air flow
Primary and secondary air	adjustable
Installation	wall - corner

TECHNICAL DATA

Model		SARA
Type		S55F
Energy efficiency class		A
Room heating capacity	m³	140 - 235
Nominal heat output	kW	8,0
Nominal thermal efficiency	%	80,3
Nominal consumption	kg/h	2,4
Standard flue outlet Ø	cm	15
Dimensions W x D x H	cm	57 x 49 x 142,5
Stainless steel oven W x D x H	cm	32 x 35 x 31,5
Stove weight	kg	225

A ENERGY EFFIC. CLASS

Prices are considered to be without sales taxes. "SUPERIOR" - Gruppo Piazzetta S.p.A. reserves the right to make any technical and aesthetic changes without prior notice.Document reserved for the Gruppo Piazzetta S.p.A. sales organisation.

SAVINA WITH OVEN

NATURAL CONVECTION

Technical drawing on page 86.

Data chart on page 69.

	TOTAL PRICE
Total price including stove and painted steel cladding	2.250,00

	MODEL/COLOUR	CODE	EURO
Firebox with cladding	BIANCO	S07023010C	2.250,00
	BORDEAUX	S07023020C	2.250,00
	BRUNITO	S07023040C	2.250,00
	GRIGIO	S07023030C	2.250,00

ACCESSORIES ON REQUEST	CODE	EURO
Anti-condensation fitting Ø 150	S08030680	57,00
Anti-condensation fitting Ø 180	S08030690	52,00
Rectangular steel floor plate	P08024300	265,00
Round edged steel floor plate	P08024310	265,00

GENERAL CHARACTERISTICS

Heating	natural convection
Cladding	painted steel
Top	cast iron
Stove	steel
Firebox	cast iron
Baffle plate	cast iron
Brazier	cast iron
Removable ash drawer	yes
Door	cast iron with automatic closure
Door handle	steel with nickel-plated finish
Standard flue outlet position	top
Ceramic glass	resistant up to 750°C
Glass cleaning system	continuous air flow
Primary and secondary air	adjustable
Installation	wall - corner

TECHNICAL DATA

Model		SAVINA
Type		S55F
Energy efficiency class		A
Room heating capacity	m³	140 - 235
Nominal heat output	kW	8,0
Nominal thermal efficiency	%	80,3
Nominal consumption	kg/h	2,4
Standard flue outlet Ø	cm	15
Dimensions W x D x H	cm	60 x 51 x 144,5
Stainless steel oven W x D x H	cm	32 x 35 x 31,5
Stove weight	kg	218

A ENERGY EFFIC. CLASS

SIBILLA

NATURAL CONVECTION

Technical drawing on page 86.

Data chart on page 69.

	TOTAL PRICE
Total price including stove and painted steel cladding	1.635,00

	MODEL/COLOUR	CODE	EURO
Firebox with cladding	BIANCO	S07022010C	1.635,00
	BORDEAUX	S07022020C	1.635,00
	BRUNITO	S07022040C	1.635,00
	GRIGIO	S07022030C	1.635,00

ACCESSORIES ON REQUEST	CODE	EURO
Anti-condensation fitting	S08030680	57,00
Rectangular steel floor plate	P08024300	265,00
Round edged steel floor plate	P08024310	265,00

GENERAL CHARACTERISTICS

Heating	natural convection
Cladding	painted steel
Top	cast iron
Stove	steel
Firebox	cast iron
Baffle plate	cast iron
Brazier	cast iron
Removable ash drawer	yes
Door	cast iron with automatic closure
Door handle	steel with nickel-plated finish
Standard flue outlet position	top
Ceramic glass	resistant up to 750°C
Glass cleaning system	continuous air flow
Primary and secondary air	adjustable
Installation	wall - corner

TECHNICAL DATA

Model		SIBILLA
Type		S55
Energy efficiency class		A
Room heating capacity	m³	140 - 235
Nominal heat output	kW	8,0
Nominal thermal efficiency	%	78,2
Nominal consumption	kg/h	2,5
Standard flue outlet Ø	cm	15
Dimensions W x D x H	cm	60 x 51 x 102
Stove weight	kg	167

A ENERGY EFFIC. CLASS

SILVIA

NATURAL CONVECTION

Technical drawing on page 86.

Data chart on page 69.

GENERAL CHARACTERISTICS

Heating	natural convection
Cladding	majolica
Top	cast iron
Stove	steel
Firebox	cast iron
Baffle plate	cast iron
Brazier	cast iron
Removable ash drawer	yes
Door	cast iron with automatic closure
Door handle	chrome-plated with anti-burn spring
Standard flue outlet position	top
Ceramic glass	resistant up to 750°C
Glass cleaning system	continuous air flow
Primary and secondary air	adjustable
Installation	wall - corner

	TOTAL PRICE
Total price including stove and majolica cladding	2.025,00

	MODEL/COLOUR	CODE	EURO
Cladding	BLU ANTICO	S06025870C	530,00
	BORDEAUX	S06025420C	530,00
	SALE PEPE	S06025070C	530,00
	TERRA ORIENTE	S06025550C	530,00
Firebox	S55C	S07015000C	1.495,00

ACCESSORIES ON REQUEST	CODE	EURO
Anti-condensation fitting	S08030680	57,00
Rectangular steel floor plate	P08024300	265,00
Round edged steel floor plate	P08024310	265,00

TECHNICAL DATA

Model		SILVIA
Type		S55
Energy efficiency class		A
Room heating capacity	m³	140 - 235
Nominal heat output	kW	8,0
Nominal thermal efficiency	%	78,2
Nominal consumption	kg/h	2,5
Standard flue outlet Ø	cm	15
Dimensions W x D x H	cm	57 x 49 x 100
Stove weight	kg	170

A ENERGY EFFIC. CLASS

SIMONA WITH OVEN

NATURAL CONVECTION

Technical drawing on page 86.

Data chart on page 69.

GENERAL CHARACTERISTICS

Heating	natural convection
Cladding	majolica
Top	cast iron
Stove	steel
Firebox	cast iron
Baffle plate	cast iron
Brazier	cast iron
Removable ash drawer	yes
Door	cast iron with automatic closure
Door handle	chrome-plated with anti-burn spring
Standard flue outlet position	top
Ceramic glass	resistant up to 750°C
Glass cleaning system	continuous air flow
Primary and secondary air	adjustable
Installation	wall - corner

	TOTAL PRICE
Total price including stove and majolica cladding	2.950,00

	MODEL/COLOUR	CODE	EURO
Cladding	BLU ANTICO	S06028870C	745,00
	BORDEAUX	S06028420C	745,00
	SALE PEPE	S06028070C	745,00
	TERRA ORIENTE	S06028550C	745,00
Firebox	S55 F	S07016000C	2.205,00

ACCESSORIES ON REQUEST	CODE	EURO
Anti-condensation fitting Ø 150	S08030680	57,00
Anti-condensation fitting Ø 180	S08030690	52,00
Rectangular steel floor plate	P08024300	265,00
Round edged steel floor plate	P08024310	265,00

TECHNICAL DATA

Model		SIMONA
Type		S55F
Energy efficiency class		A
Room heating capacity	m³	140 - 235
Nominal heat output	kW	8,0
Nominal thermal efficiency	%	80,3
Nominal consumption	kg/h	2,4
Standard flue outlet Ø	cm	15
Dimensions W x D x H	cm	57 x 49 x 142
Stainless steel oven W x D x H	cm	32 x 35 x 31,5
Stove weight	kg	225

A ENERGY EFFIC. CLASS

Prices are considered to be without sales taxes. "SUPERIOR" - Gruppo Piazzetta S.p.A. reserves the right to make any technical and aesthetic changes without prior notice.Document reserved for the Gruppo Piazzetta S.p.A. sales organisation.

STEFANIA

NATURAL CONVECTION

Technical drawing on page 86.

Data chart on page 69.

	TOTAL PRICE
Total price including stove and majolica cladding	2.025,00

	MODEL/COLOUR	CODE	EURO
Cladding	BLU ANTICO	S06024870C	530,00
	BORDEAUX	S06024420C	530,00
	SALE PEPE	S06024070C	530,00
	TERRA ORIENTE	S06024550C	530,00
Firebox	S55C	S07015000C	1.495,00

ACCESSORIES ON REQUEST	CODE	EURO
Anti-condensation fitting	S08030680	57,00
Rectangular steel floor plate	P08024300	265,00
Round edged steel floor plate	P08024310	265,00

GENERAL CHARACTERISTICS

Heating	natural convection
Cladding	majolica
Top	cast iron
Stove	steel
Firebox	cast iron
Baffle plate	cast iron
Brazier	cast iron
Removable ash drawer	yes
Door	cast iron with automatic closure
Door handle	chrome-plated with anti-burn spring
Standard flue outlet position	top
Ceramic glass	resistant up to 750°C
Glass cleaning system	continuous air flow
Primary and secondary air	adjustable
Installation	wall - corner

TECHNICAL DATA

Model		STEFANIA
Type		S55
Energy efficiency class		A
Room heating capacity	m³	140 - 235
Nominal heat output	kW	8,0
Nominal thermal efficiency	%	78,2
Nominal consumption	kg/h	2,5
Standard flue outlet Ø	cm	15
Dimensions W x D x H	cm	57 x 49 x 100
Stove weight	kg	170

A ENERGY EFFIC. CLASS

VALERIA

NATURAL CONVECTION

Technical drawing on page 86.

Data chart on page 70.

	TOTAL PRICE
Total price including stove and majolica cladding	2.480,00

	MODEL/COLOUR	CODE	EURO
Cladding	BLU ANTICO	S06051870C	1.130,00
	BORDEAUX	S06051420C	1.130,00
	SALE PEPE	S06051070C	1.130,00
	TERRA ORIENTE	S06051550C	1.130,00
Firebox	VALERIA	S07083000C	1.350,00

ACCESSORIES ON REQUEST	CODE	EURO
Anti-condensation fitting	S08030750	52,00
Rectangular steel floor plate	P08024300	265,00
Round edged steel floor plate	P08024310	265,00

GENERAL CHARACTERISTICS

Heating	natural convection
Cladding	majolica
Top	majolica
Stove	steel
Firebox	Skamolex
Baffle plate	Skamolex
Brazier	cast iron - Skamolex
Removable ash drawer	yes
Door	cast iron with automatic closure
Door handle	steel with nickel-plated finish
Standard flue outlet position	top - rear
Ceramic glass	resistant up to 750°C
Glass cleaning system	continuous air flow
Primary and secondary air	adjustable - pre-determined
Installation	wall - corner

TECHNICAL DATA

Model		VALERIA
Type		VANESSA
Energy efficiency class		A
Room heating capacity	m³	120 - 200
Nominal heat output	kW	7,0
Nominal thermal efficiency	%	78,8
Nominal consumption	kg/h	2,4
Standard flue outlet Ø	cm	15
Dimensions W x D x H	cm	59,5 x 45,5 x 119,5
Stove weight	kg	139,5

A ENERGY EFFIC. CLASS

VIOLA

NATURAL CONVECTION

Technical drawing on page 87.

Data chart on page 70.

GENERAL CHARACTERISTICS

Heating	natural convection
Cladding	majolica
Top	majolica
Stove	steel
Firebox	Skamolex
Baffle plate	Skamolex
Brazier	cast iron - Skamolex
Removable ash drawer	yes
Door	cast iron with automatic closure
Door handle	steel with nickel-plated finish
Standard flue outlet position	top - rear
Ceramic glass	resistant up to 750°C
Glass cleaning system	continuous air flow
Primary and secondary air	adjustable - pre-determined
Installation	wall - corner

			TOTAL PRICE
Total price including stove and majolica cladding			2.390,00

	MODEL/COLOUR	CODE	EURO
Cladding	BLU ANTICO	S06063870C	1.040,00
	BORDEAUX	S06063420C	1.040,00
	SALE PEPE	S06063070C	1.040,00
	TERRA ORIENTE	S06063550C	1.040,00
Firebox	VIOLA	S07086000C	1.350,00

ACCESSORIES ON REQUEST	CODE	EURO
Anti-condensation fitting	S08030750	52,00
Rectangular steel floor plate	P08024300	265,00
Round edged steel floor plate	P08024310	265,00

TECHNICAL DATA

Model		VIOLA
Type		TYP10188
Energy efficiency class		A+
Room heating capacity	m^3	135 - 230
Nominal heat output	kW	8,0
Nominal thermal efficiency	%	80,8
Nominal consumption	kg/h	2,6
Standard flue outlet Ø	cm	15
Dimensions W x D x H	cm	58 x 42 x 105
Stove weight	kg	135

A ENERGY EFFIC. CLASS

Prices are considered to be without sales taxes. “SUPERIOR” - Gruppo Piazzetta S.p.A. reserves the right to make any technical and aesthetic changes without prior notice.Document reserved for the Gruppo Piazzetta S.p.A. sales organisation.

Accessories

PIPES - BENDS - CONNECTORS FOR WOOD-BURNING STOVES

Aluminium coated steel connecting flue pipes single wall, 2 mm thick, V2 corrosion resistance class, EN 1856-2 compliant

For wood-burning stoves: MANUELA, MARELLA, MEDEA, MICAELA, MILVA, MIRIAM
For wood-burning stoves with oven: MADDALENA, MALIKA, MILENA, MORENA

	ITEM	DIMENSIONS IN CM	Ø MM	CODE	EURO
	Anti-condensation fitting	-	120	S08030660	**57,00**
	Fitting ø 120/140 for inserting pipes Ø 140	-	140	S08030730	**30,00**
	Fitting ø 120/140 for inserting anti-condensation pipes Ø 140	-	140	S08030670	**62,00**
	Pipe	L 25	140	P08025010	**41,00**
		L 50	140	P08025040	**57,00**
		L 100	140	P08025070	**88,00**
	Pipe with damper [1]	L 50	140	P08025120	**72,00**
		L 100	140	P08025130	**103,00**
	Bend 90° (2x45°) with inspection	L 32 x H 32	140	P08025190	**77,00**
	Bend 45° with inspection	L 25 x H 30	140	P08025220	**72,00**
	Bend 45°	L 17 x H 17	140	P08025250	**57,00**
	Bend 90° (2x45°) w/damper and inspection [1]	L 70 x H 45	140	P08025160	**160,00**
	Wall connector	-	140	P08025280	**12,00**
	Damper	-	140	P08025340	**41,00**
	Flue ring	-	140	P08025310	**31,00**

[1] Compatible ONLY with anti-condensation.

Accessories

PIPES - BENDS - CONNECTORS FOR WOOD-BURNING STOVES

Aluminium coated steel connecting flue pipes single wall, 2 mm thick, V2 corrosion resistance class, EN 1856-2 compliant

For wood-burning stoves: SANDRA, SIBILLA, SILVIA, STEFANIA, VALERIA, VIOLA
For wood-burning stoves with oven: SARA, SAVINA, SIMONA

	ITEM	DIMENSIONS IN CM	Ø MM	CODE	EURO
	Anti-condensation fitting for SANDRA - SARA - SAVINA - SIBILLA - SILVIA - SIMONA - STEFANIA	-	150	S08030680	**57,00**
	Pipe	L 25	150	P08025020	**41,00**
		L 50	150	P08025050	**57,00**
		L 100	150	P08025080	**88,00**
	Pipe with damper [1]	L 50	150	P08025100	**72,00**
		L 100	150	P08025140	**103,00**
	Bend 90° (2x45°) with inspection	L 32 x H 32	150	P08025200	**77,00**
	Bend 45° with inspection	L 25 x H 30	150	P08025230	**72,00**
	Bend 45°	L 17 x H 17	150	P08025260	**57,00**
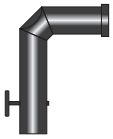	Bend 90° (2x45°) w/damper and inspection [1]	L 70 x H 45	150	P08025170	**160,00**
	Wall connector	-	150	P08025290	**12,00**
	Damper	-	150	P08025350	**41,00**
	Flue ring	-	150	P08025320	**31,00**

[1] Compatible ONLY with anti-condensation.

Prices are considered to be without sales taxes. "SUPERIOR" - Gruppo Piazzetta S.p.A. reserves the right to make any technical and aesthetic changes without prior notice.Document reserved for the Gruppo Piazzetta S.p.A. sales organisation.

Accessories

PIPES - BENDS - CONNECTORS FOR WOOD-BURNING STOVES

Aluminium coated steel connecting flue pipes single wall, 2 mm thick, V2 corrosion resistance class, EN 1856-2 compliant

For wood-burning stoves with oven: SARA, SAVINA, SIMONA

	ITEM	DIMENSIONS IN CM	Ø MM	CODE	EURO
	Anti-condensation fitting	-	180	S08030690	**52,00**
	Pipe	L 25	180	P08025030	**46,00**
		L 50	180	P08025060	**62,00**
		L 100	180	P08025090	**93,00**
	Pipe with damper [1]	L 50	180	P08025110	**72,00**
		L 100	180	P08025150	**108,00**
	Bend 90° (2x45°) with inspection	L 32 x H 32	180	P08025210	**88,00**
	Bend 45° with inspection	L 25 x H 30	180	P08025240	**77,00**
	Bend 45°	L 17 x H 17	180	P08025270	**62,00**
	Bend 90° (2x45°) w/damper and inspection [1]	L 70 x H 45	180	P08025180	**170,00**
	Wall connector	-	180	P08025300	**43,00**
	Damper	-	180	P08025360	**46,00**
	Flue ring	-	180	P08025330	**36,00**

[1] Compatible ONLY with anti-condensation.

FLOOR PROTECTION

	ITEM	COMPATIBLE MODELS	DIMENSIONS IN CM	CODE	EURO
	Rectangular steel floor plate	All models	100x120	P08024300C	**265,00**
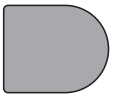	Round edged steel floor plate	All models	100x120	P08024310C	**265,00**

Technical drawings

MADDALENA WITH OVEN

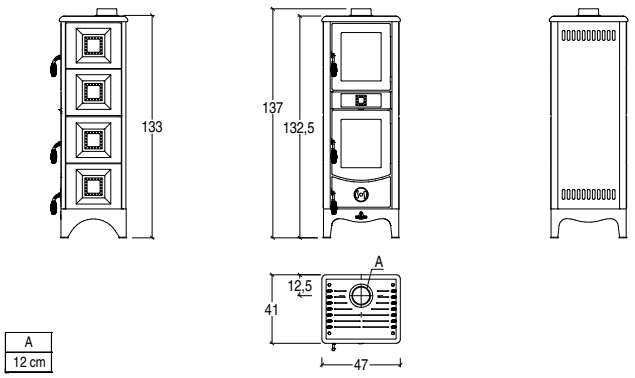

MALIKA WITH OVEN

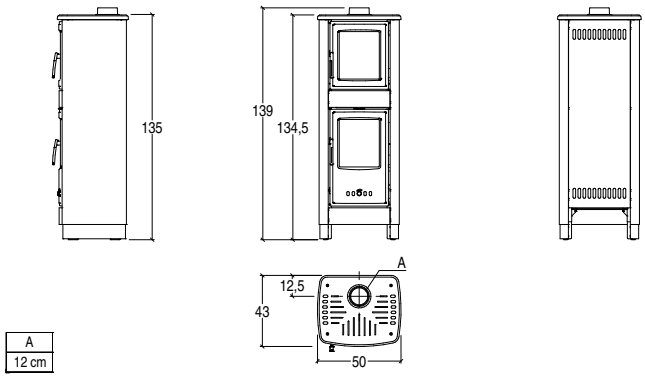

MANUELA

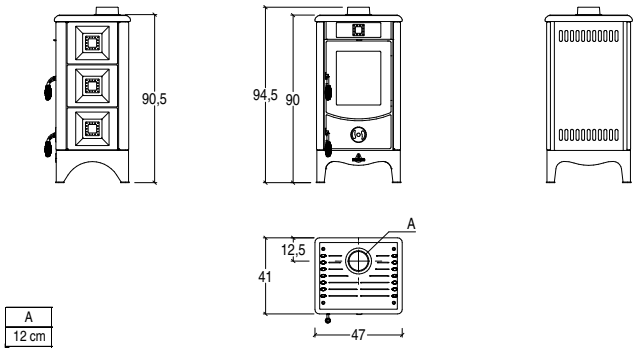

MARELLA

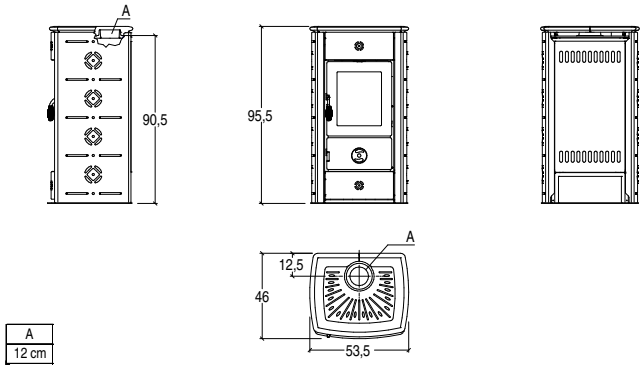

MEDEA

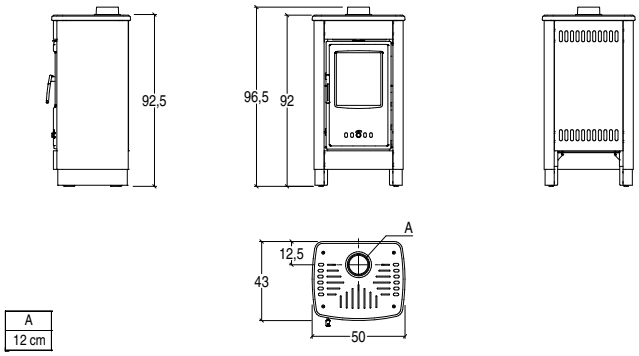

MICAELA

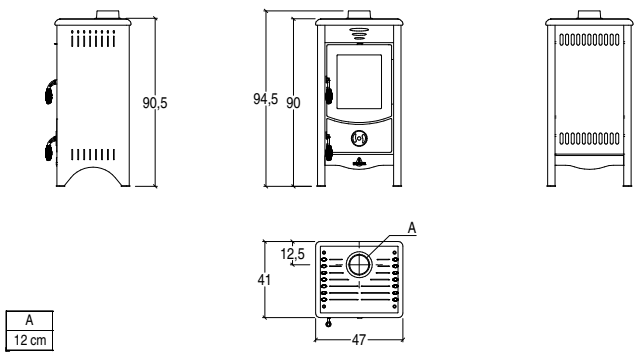

All drawing dimensions in cm.

Prices are considered to be without sales taxes. “SUPERIOR” - Gruppo Piazzetta S.p.A. reserves the right to make any technical and aesthetic changes without prior notice.Document reserved for the Gruppo Piazzetta S.p.A. sales organisation.

Technical drawings

MILENA WITH OVEN

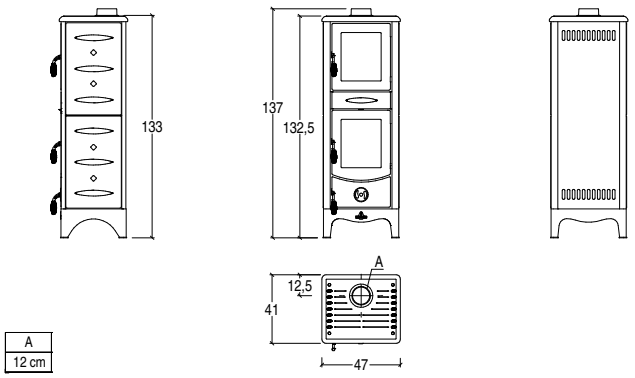

MILVA

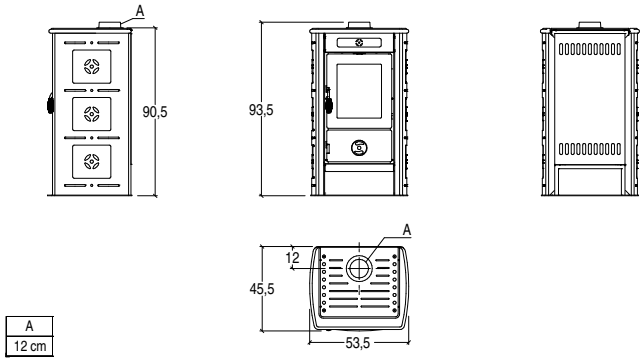

MIRIAM

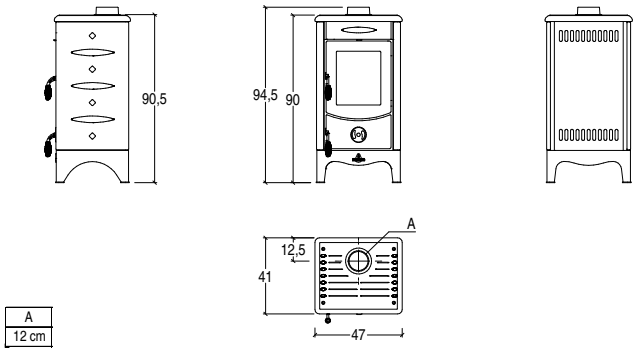

MORENA WITH OVEN

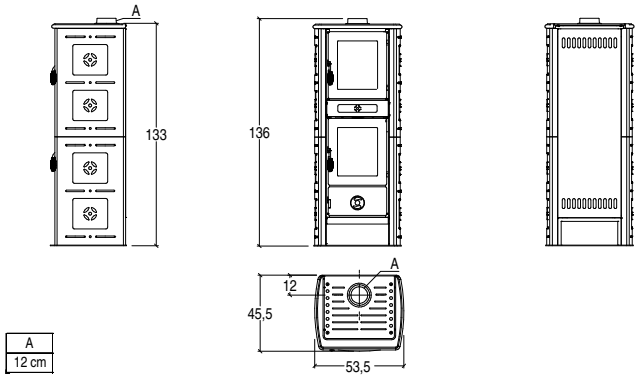

SANDRA

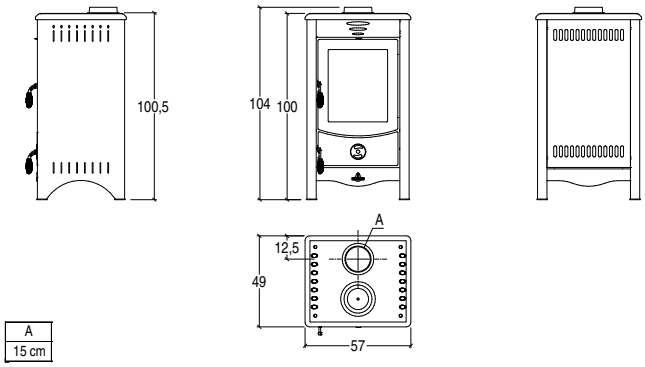

SARA WITH OVEN

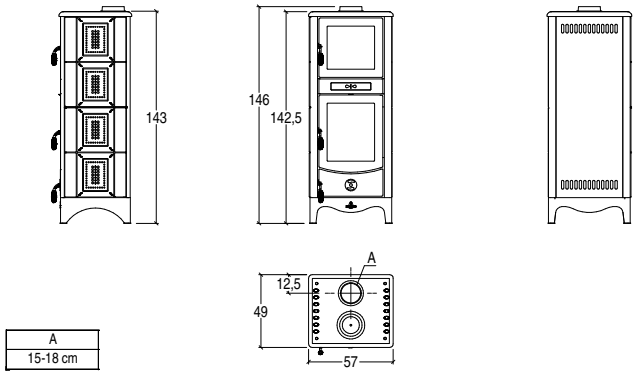

All drawing dimensions in cm.

Technical drawings

SAVINA WITH OVEN

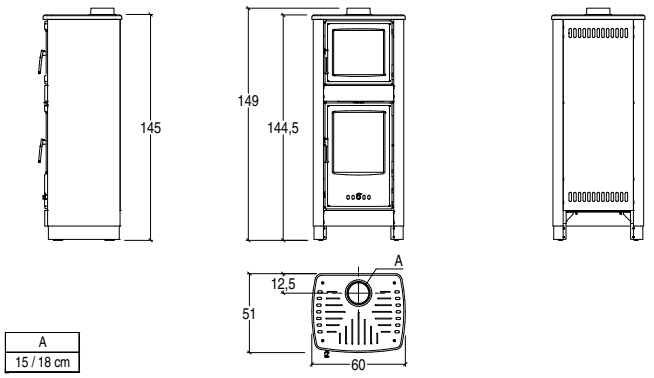

SIBILLA

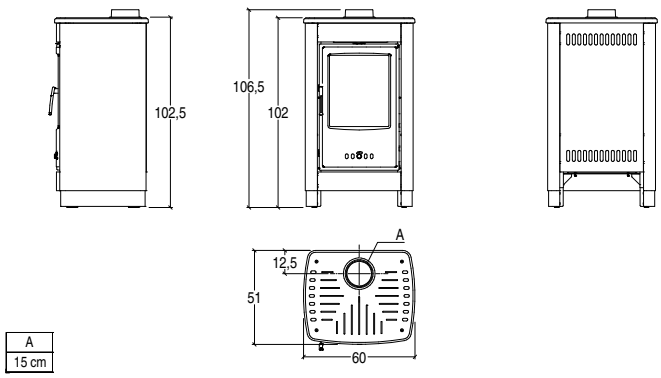

SILVIA

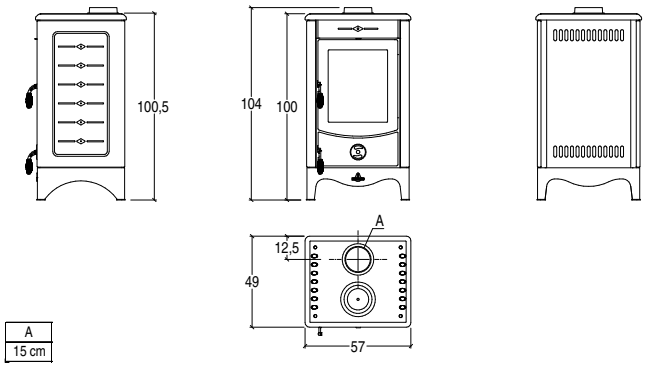

SIMONA WITH OVEN

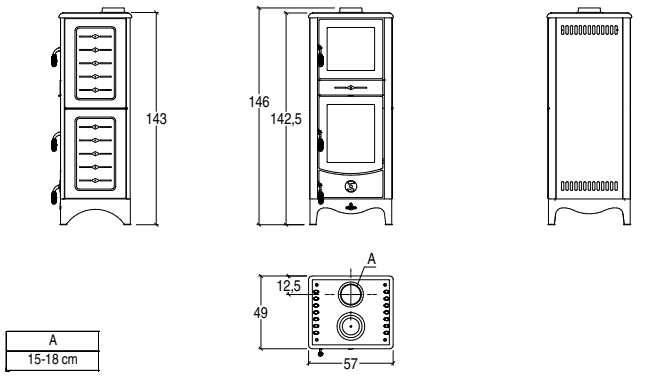

STEFANIA

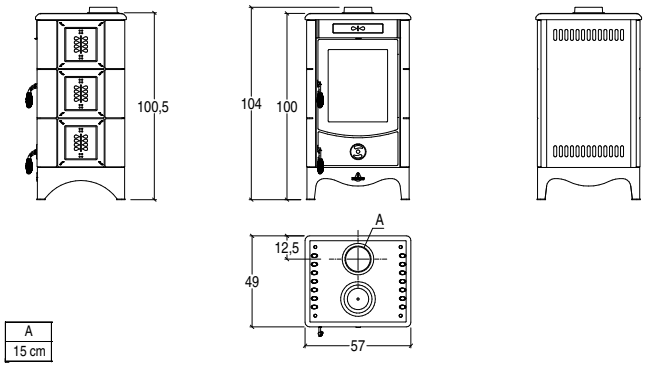

VALERIA

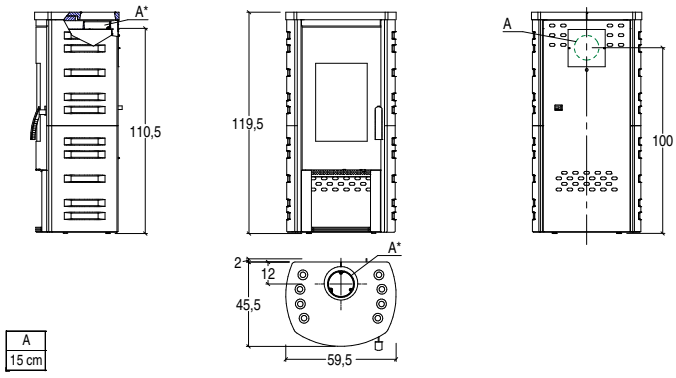

All drawing dimensions in cm.

Prices are considered to be without sales taxes. "SUPERIOR" - Gruppo Piazzetta S.p.A. reserves the right to make any technical and aesthetic changes without prior notice.Document reserved for the Gruppo Piazzetta S.p.A. sales organisation.

Technical drawings

VIOLA

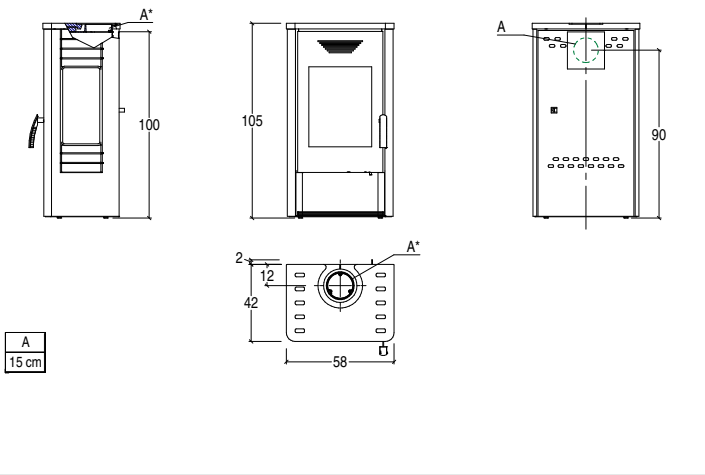

All drawing dimensions in cm.

Superior informs

Majolica

CHARACTERISTICS: in order to appreciate the characteristic, it is necessary to be informed on this prestigious material.

1) Aesthetic functionality: the inner steel or cast iron burner is surrounded by majolica shapes and colours.
2) As a source of heating: majolica, given its natural semi-refractory characteristics, it resists to heat by accumulating it and diffusing it into the ambient air.

It is easy to understand that the larger the majolica piece the more heat it can radiate. Therefore the few and large sizes of the majolica pieces are to be appreciated for the fact that they distribute heat into the room and over time.

The fabrication of large pieces of majolica necessitates a know-how only achieved through a long experience over years in the field. Just stop to think each it takes 12 to 15 days to make a single piece of majolica, with the manual expertise of a dozen or so qualified ceramic masters. Thus due to the long process and manual craftsmanship put into each piece of majolica made by "SUPERIOR" - Gruppo Piazzetta S.p.A. is considered to be unique piece of art work and no two exactly alike.

Important to note that the finishes (the liquid suspension of minerals, finely ground, applied onto the biscuit, which bake to fusion temperature, create a either glossy or dull finish) which chromatically enhance and beautify the "biscuit" (a name given to clay after its first baking process), are all part of controlled chemical reactions which inevitably leave way to phenomena like crazing, speckles and shading... which are not to be considered defects on the majolica but add characteristics of peculiarity to the final piece.

CRAZING: manifests itself on the enameled surface or in crystallization in an intricate form of cracking more or less visible to the naked eye. This is due to the different dilatation coefficient between enamel and the particular semi refractory principals of the biscuit (not to be confused with other materials like porcelain, stoneware, vitreous, fire clay etc...). The crazing distinguishes and characterizes this type of majolica for its specific usage: to cover a piece of material that radiates heat throughout.

PITTING: is present on the surface of the enamel or the crystalline in the form of pinholes. It is caused by gas bubbles, in the enamel itself or in the biscuit, that emerge on the surface through the vitreous mass during softening.

SHADING: typical of red enamels, it shows as clouds of tiny black dots caused by the chemical reaction of iron oxide present variable in the pigment itself. They are formed during the cooling phase after firing.

Despite the complexity of the multiple and variable results given by this particular, hand made and hand painted product, "SUPERIOR" - Gruppo Piazzetta S.p.A. ensures the utmost care in the manufacture and quality control of all its majolica production, which true connoisseurs do not hesitate to define as authentic artworks.

SHADE DIFFERENCES: shade differences might vary according to the shape of the majolica plates even within the same production lot. The biscuit, its shape, and the firing temperatures of each single glaze create colour shades that make each majolica plate unique.

General sales terms and conditions

ORDERS: must be sent in written form by either email or fax (+39 423 527250).

The article number, article description and desired quantity must be specified. Order modifications and/or additions must be communicated to our sales department at least TWO DAYS BEFORE the confirmed loading date.

RETURNS: any returns must be AUTHORISED exclusively by our MANAGEMENT.

Returns are accepted only if the product is in as-new condition, and will be credited at 70% of the purchase price. The return document must give the references of the delivery document or invoice issued by "Superior" - Gruppo Piazzetta S.p.A. and the reason for the return.

DISPUTES: disputes will not be considered after 7 days from delivery date.

A claim must be submitted, at time of delivery, against the transporter directly on the carrier document and copy of the document must be sent to our sales department in case of damages to the products caused during transportation.

PAYMENT DELAY: the delay of payment will result in an interest compensation towards "Superior" - Gruppo Piazzetta S.p.A. as per the Italian Legislative Decree 231/2002 and any subsequent amendments. Furthermore, the lack of total or partial payment of the invoices, will, at "Superior" - Gruppo Piazzetta S.p.A.'s discretion, result in suspension or cancellation of all pending orders.

WARRANTY: Please consult the full document of the Warranty Contract, available on the website https://gruppopiazzetta.box.com/s/ks4fzo20nsgori1bvwnwwsesfbrm76km.

The present price list annuls and replaces all preceding price lists. All products are packaged on non-returnable pallets. Prices are considered to be without VAT (government sales taxes). "Superior" - Gruppo Piazzetta S.p.A. reserves the right to modify and/or delete all printed material, if deemed necessary by "Superior" - Gruppo Piazzetta S.p.A. without any written or prior notice.

SUPERIOR
CALORE DA VIVERE

GRUPPO PIAZZETTA
Via Montello, 22 - 31011 Casella d'Asolo (TV) Italy
tel.+39 0423 5271 - fax +39 0423 55178
www.superiorstufe.it - info@superiorstufe.it
800-842026

AZIENDA CERTIFICATA ISO 9001:2008